REV.	ECN NO.	DATE	SIGN	DESCRIPTION
H	C221879	2022/12/20	Ruru	H X1
I	C231031	2023/08/04	Ruru	I X1
J	C240699	2024/06/20	Vicky	J X2

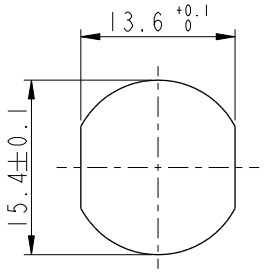

B

Recommended Panel Cut-Out

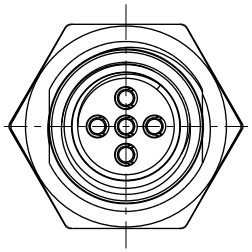

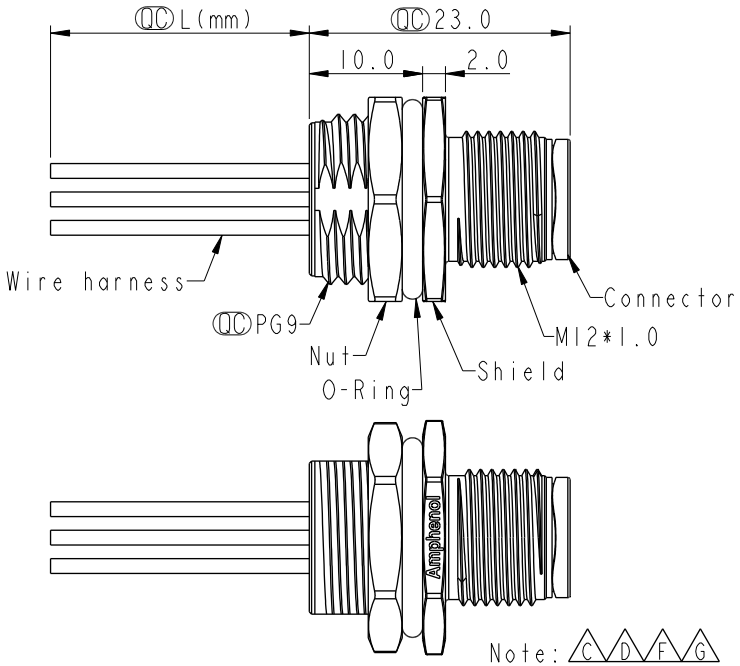

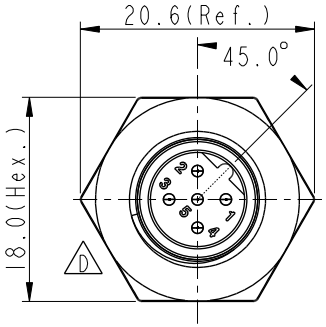

Pin #	Wire	
5	Gray	灰
4	Black	黑
3	Blue	藍
2	White	白
1	Brown	棕

Pin Out

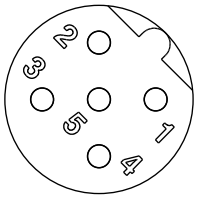

Pin Assignments Front View

C D E G

M12B-XXPMMC-SH8BXX

XX: No. Of Pin

J

15:150mm
20:200mm
∫
95:950mm
Cable Pitch Unit=50mm

A0:1000mm
∫
A5:1500mm
Cable Pitch Unit=100mm
Wire Length (L):150~1500mm

Note: C D F G
* RoHS Compliant
* QC Important dimension
H * Waterproof rate: IP68, unmated 1m/24h
I IP69K, mated
* Connector
  Housing: Thermoplastic, Black
  Pin: Copper alloy, Gold plated
* Shield: Metal
* Nut: Metal
* O-Ring: Rubber, Black
* Wire harness: UL1061, 22AWG
* For panel thickness max: 4.5mm
* O-Ring and nut are assembled on connectors
J * Wire harness tolerance: 150mm < L ≦ 300mm: ±15mm
300mm < L ≦ 1000mm: ±20mm
1000mm < L ≦ 1500mm: +50/-0mm

UNIT:mm

TOLERANCE
.X ±0.25
.XX ±0.1
.XXX ±0.05
ANGLES ±1°

TITLE: N SEN, M12 B, SCREW RECEPTACLE, M, M, F1/PANEL CRIMP D E G

SCALE	SIZE	SHEET	OF
2:1	A4	1	1
REV. J	WC-REV. A.5	QC: Inspection item	

Amphenol LTW
安費諾亮泰企業股份有限公司

ITEM NO		DRAWN BY: Vicky	DATE: 2024-06-20
DWG NO: E M12B-XXPMMC-SH8BXX		CHECKED BY: Rita	DATE: 2024-06-20
CUSTOMER: ALTW		APPROVED BY: Fred	DATE: 2024-06-20

THIS DOCUMENT IS SUBJECT TO CHANGE WITHOUT NOTICE. IT IS CONFIDENTIAL AND A PROPERTY OF Amphenol LTW. DISCLOSURE TO THIRD PARTY HAS TO BE AUTHORIZED BY Amphenol LTW.