REV.	ECN NO.	DATE	SIGN	DESCRIPTION
G	C231037	2023/08/07	Vicky	G X1
H	C240699	2024/06/20	Vicky	H X2
I	C241122	2024/10/27	Henry	I X1

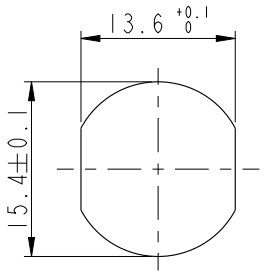

Recommended Panel Cut-Out

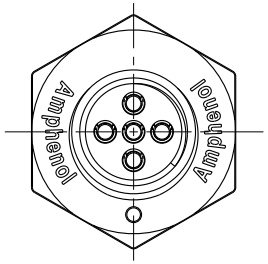

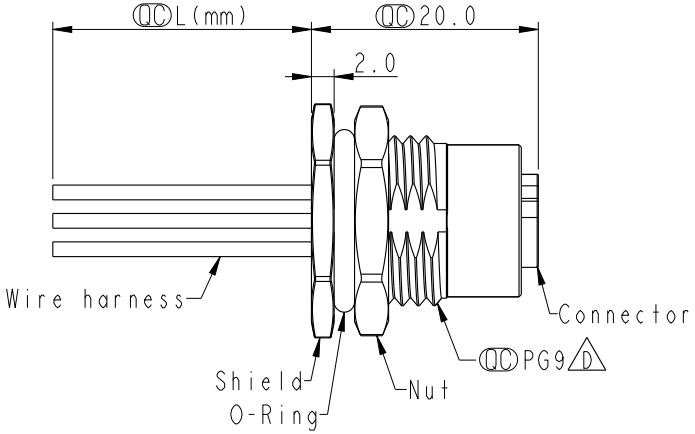

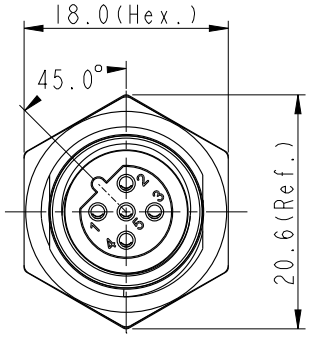

Pin #	Wire	
5	Gray	灰
4	Black	黑
3	Blue	藍
2	White	白
1	Brown	棕

Pin Out

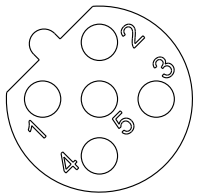

Pin Assignments
Front View

C D E
M12B-XXPFFC-SF8BXX

XX: No. Of Pin

H
15:150mm
20:200mm
∫
95:950mm
Cable Pitch Unit=50mm

A0:1000mm
∫
A5:1500mm
Cable Pitch Unit=100mm
Wire Length (L):150~1500mm

Note: C D E
* RoHS Compliant
* QC Important dimension
F * Waterproof rate: IP68, unmated 1m/24h
G IP69K, mated
* Connector
  Housing: Thermoplastic, Black
  Pin: Copper alloy, Gold plated
  O-Ring: Rubber, Green
* Shield: Metal
* Nut: Metal
* O-Ring: Rubber, Black
* Wire harness: UL1061, 22AWG
* For panel thickness max: 4.5mm
* O-Ring and nut are assembled on connectors
H * Wire harness tolerance: 150mm < L ≦ 300mm: ±15mm
  300mm < L ≦ 1000mm: ±20mm
  1000mm < L ≦ 1500mm: +50/-0mm

UNIT:mm

TOLERANCE
.X ±0.25
.XX ±0.1
.XXX ±0.05
ANGLES ±1°

TITLE	N SEN, M12 B, SCREW RECEPTACLE, F, F, F1/PANEL CRIMP E
SCALE	2:1
SIZE	A4
SHEET	1 OF 1
REV.	1
WC-REV.	A.5
QC: Inspection item	

Amphenol LTW
安費諾亮泰企業股份有限公司

ITEM NO		DRAWN BY Henry	DATE 2024-10-27
DWG NO D M12B-XXPFFC-SF8BXX		CHECKED BY Jerry	DATE 2024-10-27
CUSTOMER ALTW		APPROVED BY Fred	DATE 2024-10-27

W10814-03-[redacted]01A2

THIS DOCUMENT IS SUBJECT TO CHANGE WITHOUT NOTICE. IT IS CONFIDENTIAL AND A PROPERTY OF Amphenol LTW. DISCLOSURE TO THIRD PARTY HAS TO BE AUTHORIZED BY Amphenol LTW.