REV.	ECN NO.	DATE	SIGN	DESCRIPTION
B	C210561	2021/04/12	Vicky	B X4
C	C221953	2022/12/15	Ruru	C X1
D	C241122	2024/10/26	Henry	D X1

D

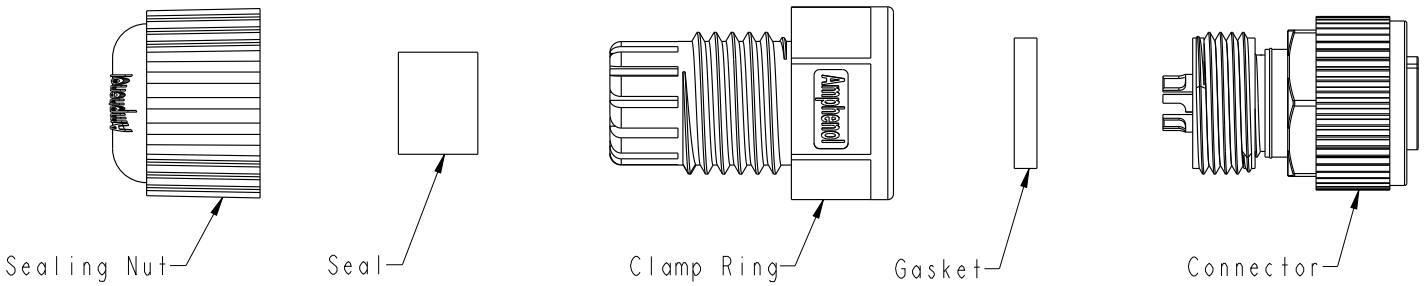

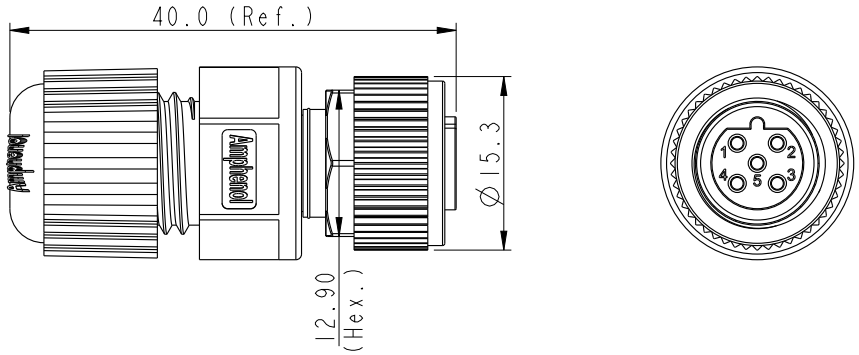

B M12B-XXBFFA-SL8001

XX: No. Of Pin

B Note:
* RoHS Compliant
* QC Important Dimension
C * Waterproof rate: IP68, mated 1m/24h
* Connector
  Housing: Thermoplastic, Black
  Pin: Copper alloy, Gold plated
  Extension Nut: Thermoplastic, Black
  Nut: Metal
  O-Ring: Rubber, Gray
* Gasket: Rubber, Gray
* Clamp Ring: Thermoplastic, Black
* Sealing Nut: Thermoplastic, Black
* Seal: Rubber, Gray, OD:Ø4.5mm~Ø6.5mm
* One set unassembled in one pe bag

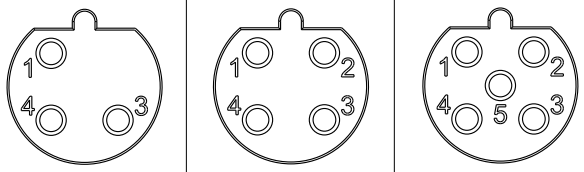

Pin Assignments Front View

UNIT: mm

TOLERANCE
.X ±0.25
.XX ±0.1
.XXX ±0.05
ANGLES ±1°

B

TITLE: N SEN, M12 B, SCREW CABLE W/O SR, F, F, FI SOLDER B

SCALE 1:1 | SIZE A4 | SHEET 1 OF 1

REV. D | WC-REV. A.5 | QC: Inspection item

Amphenol LTW

安費諾亮泰企業股份有限公司

ITEM NO	DRAWN BY: Henry	DATE: 2024/10/26
DWG NO: M12B-XXBFFA-SL8001	CHECKED BY: Jerry	DATE: 2024/10/26
CUSTOMER: ALTW	APPROVED BY: Fred	DATE: 2024/10/26

THIS DOCUMENT IS SUBJECT TO CHANGE WITHOUT NOTICE. IT IS CONFIDENTIAL AND A PROPERTY OF Amphenol LTW. DISCLOSURE TO THIRD PARTY HAS TO BE AUTHORIZED BY Amphenol LTW.