REV.	ECN NO.	DATE	SIGN	DESCRIPTION
E	C210309	2021/02/25	Ruru	E XI
F	C221973	2022/12/21	Ruru	F XI
G	C231034	2023/08/08	Ruru	G XI

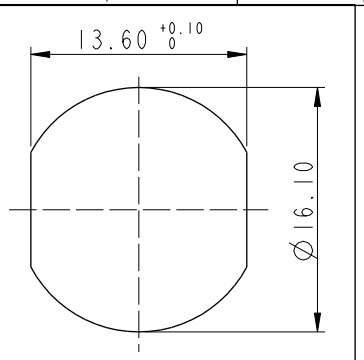

Recommended
Panel Cut-Out

D
M12A-XXPFFP-SH8002

XX: No. Of Pin

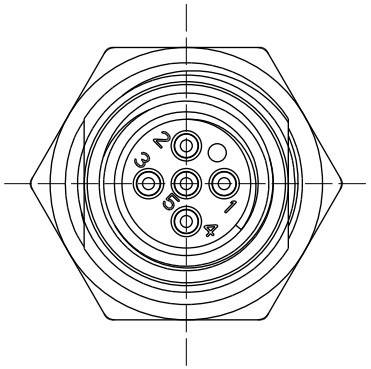

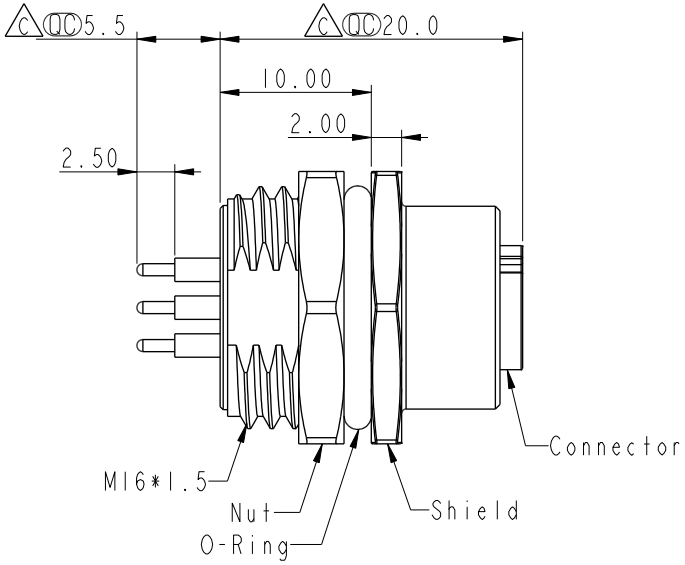

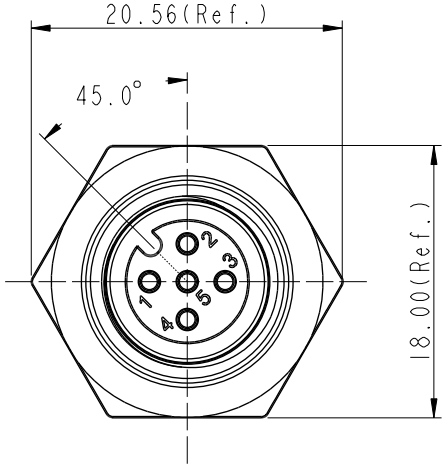

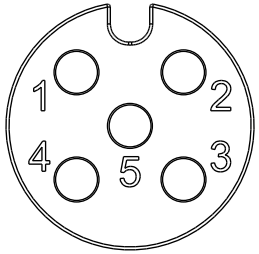

5P

Pin Assignment
Front View

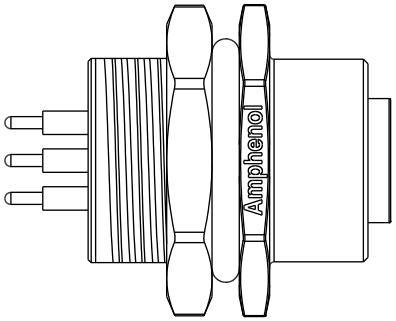

D E Note:
* RoHS Compliant
* QC Important dimension
F * Waterproof rate: IP68, unmated 1m/24h
G IP69K, mated
* Connector
B Housing: Thermoplastic, Black
Pin: Copper alloy, Gold plated
O-Ring: Rubber, Green
* Shield: Metal
* Nut: Metal
* O-Ring: Rubber, Black
* For panel thickness max: 4.5mm
* Nut is packed separately in pe bag

UNIT: mm

TOLERANCE
.X ±0.25
.XX ±0.1
.XXX ±0.05
ANGLES ±1°

TITLE: N SEN, M12 A, SCREW RECEPTACLE, F, F, PCB S D			
SCALE 2:1	SIZE A4	SHEET 1 OF 1	
REV. G	WC-REV. A.3	QC: Inspection item	

Amphenol LTW
安費諾亮泰企業股份有限公司

ITEM NO	DRAWN BY Allen	DATE 2019/08/02
DWG NO D M12A-XXPFFP-SH8002	CHECKED BY Wen	DATE 2019/08/02
CUSTOMER ALTW	APPROVED BY Neo	DATE 2019/08/02

W10814-03-RW01A2

THIS DOCUMENT IS SUBJECT TO CHANGE WITHOUT NOTICE. IT IS CONFIDENTIAL AND A PROPERTY OF Amphenol LTW. DISCLOSURE TO THIRD PARTY HAS TO BE AUTHORIZED BY Amphenol LTW.