SIGN	DATE	DESCRIPTION	APPROVER
1	2010.05.29	Add cULus standard	Jacke
		THIS IS CAD DRAWING, DO NOT REVISE MANUALLY!!!	

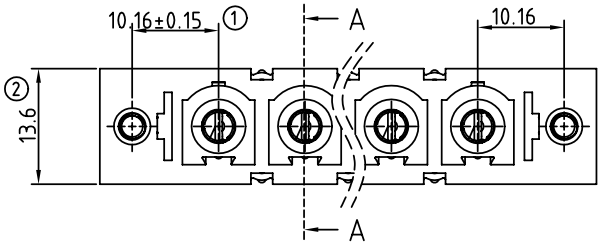

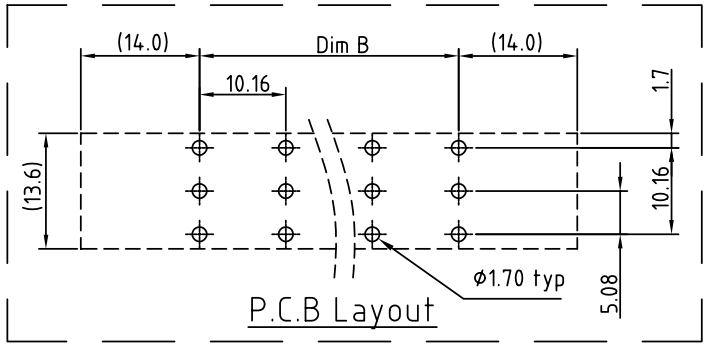

P.C.B Layout

Material:

- Item a Terminal(housing): Thermoplastic (UL 94 - V0)
- Item b Male contact pin: Copper Tin plated
- Item c Wire guard:Stainless Steel
- Item d With flange nut : Steel zinc plated M3

Electrical: cULus / IEC

- Voltage rating:300V / 1000V
- Current rating:55A / 76A
- Withstanding Voltage:1.6 KV / 8 KV
- Operating temperature: -40°C to +115°C
- Soldering temperature:250°C±10°C/5 Sec
- 1 Safety Approval: c UL us

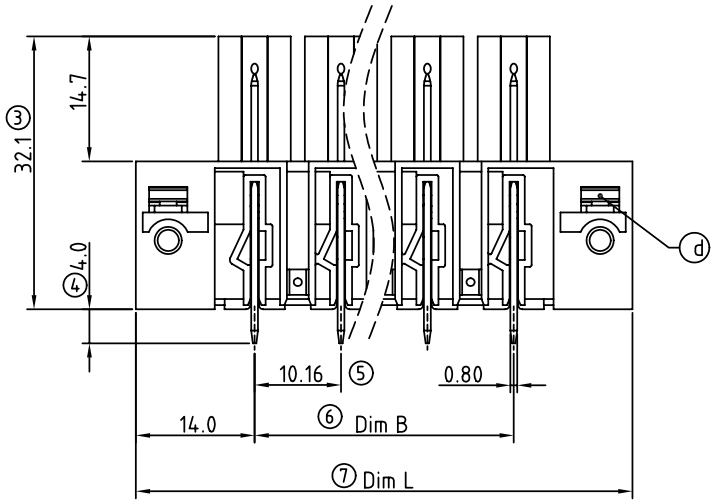

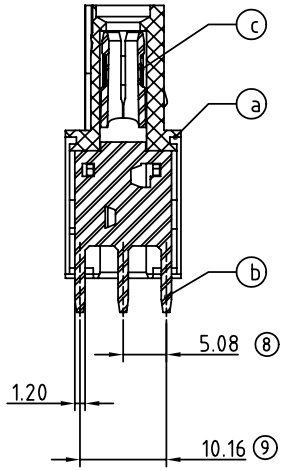

SECTION A-A

PART NO.

KL xx 62 x 0 xxxx G

No. OF POLES
02 2 CONTACTS
03 3 CONTACTS
... ...
12 12 CONTACTS

Color
0 Black (RAL9005)
2 Red (RAL3001/D)
3 Orange(RAL2011/P)
4 Yellow(RAL1018/A)
5 Green(RAL6018/T)
6 Blue (RAL5015/A)
8 Grey(RAL7035/D)

G: Pb<40000ppm

0000: "@" Logo (Standard)
000A: "ANYTEK" Mark
Any special item by customer requst. please contact sales department.

Poles	02	03	04	05	06	07	08	09	10	11	12
Dim L	38.08	48.24	58.40	68.56	78.72	88.88	99.04	109.20	119.36	129.52	139.68
Dim B	10.16	20.32	30.48	40.64	50.80	60.96	71.12	81.28	91.44	101.60	111.76
TOL	±0.25					±0.35					

ANYTEK

CUSTOMER COPY

ALL RIGHTS RESERVED. REPRODUCTION OR ISSUE TO THIRD PARTIES IN ANY FORM WHATEVER IS NOT PERMITTED WITHOUT WRITTEN AUTHORITY FROM THE PROPRIETOR. PROPERTY OF ANYTEK TECHNOLOGY CO., LTD

TITLE	KL 10.16 Series 2p-12p Vertical W/Flange					
PART NO.	KLxx62x0xxxxG			DWG NO.	8KL0006	
APPROVED	CHECKED	DESIGNED	DRAWN	CUST NO.		Tolerance
		Jacke 2010.05.29	Jacke 2009.07.10		UNIT: mm	X. ±0.50
					SCALE: NONE	X.X ±0.30
				SHEET: 01/01	REV.: C	X.XX ±0.10
						X° ±1°