Common Mode SCF-XV Coils, Automotive Grade

Overview

The KEMET SCF-XV coils are common mode chokes with a wide variety of characteristics for automotive and harsh environment industrial application. These toroidal coils are designed with nanocrystalline metal cores and are useful in various noise countermeasure fields.

Applications

- On board charger for EV/PHEV
- Wireless charging systems with 85 kHz
- Medium power drives for steering, air conditioning and mild hybrid 48 V systems
- High voltage automotive and harsh environment industrial EMI filtering

Benefits

- Nanocrystalline metal core
- High rated voltage up to 1,000 V AC/DC
- Operating temperature range from -40°C up to +150°C
- Ultra-high inductance
- Ultra-high permeability
- UL 94 V–0 flame retardant rated base and cap
- AEC-Q200 qualified

SCF**XV-JV

SCF**XV-JH

Part Number System

SCF	19XV-	080-		1R0	A	011	JV
Series	Dimension Code (See Dimensions)	Rated Current (A)	Phase	Wire Diameter (mm)	Windings	Number of Turns	Terminal Base Type
SCF	19XV 25XV 29XV 39XV	xxx- = xx.x A Examples: 080 = 8.0 A 200 = 20.0 A	Blank = Single-phase S = Three-phase Y = Four-phase Z = Four-phase asymetric	R = Decimal point Examples: 1R0 = 1.0 mm 2R4 = 2.4 mm	A = Single B = Double	00x = x turns 0xx = xx turns Examples: 005 = 5 turns 011 = 11 turns	JV = Vertical type JH = Horizontal type

© KEMET Electronics Corporation • One East Broward Boulevard
Fort Lauderdale, FL 33301 USA • 954-766-2800 • www.kemet.com

Magnetic Permeability of Ferrite Material

In order to achieve most efficient noise reduction, it is important to select the material according to the target frequency band. Depending on its magnetic permeability, a particular ferrite material will be effective in a certain frequency band. A schematic representation of the relationship between the magnetic permeability of each material and the corresponding effective band range is shown in Figure 1.

Materials with higher magnetic permeability are effective in the lower frequency range, while those with lower magnetic permeability are effective in the higher frequency range. Thus, Mn-Zn products are mainly used for reducing conduction noise, while Ni-Zn products are commonly used for radiation noise countermeasures.

The effective frequency range varies depending on core shape, size and number of windings. This frequency dependence of the magnetic permeability as shown in the figure serves for reference purposes only and it should be tested on the actual device to determine its effectiveness.

S18H, S15H, 10H, 7H, 7HT, 5H, 5HT, 1400L, and 700L are KEMET's proprietary ferrite material names.
Other materials are available upon request.

Figure 1 - Relationship between the magnetic permeability of each material and its effective frequency range

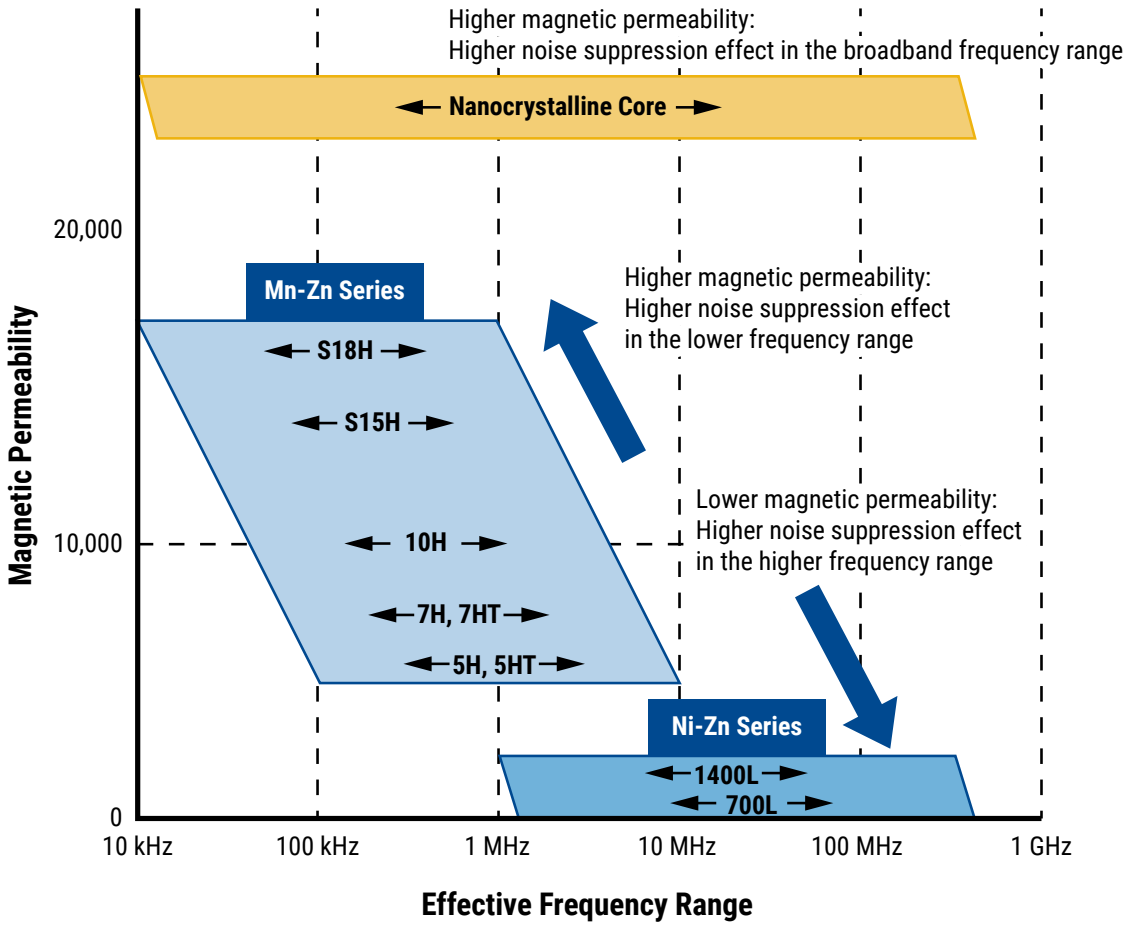

Dimensions – Millimeters

Figure 1

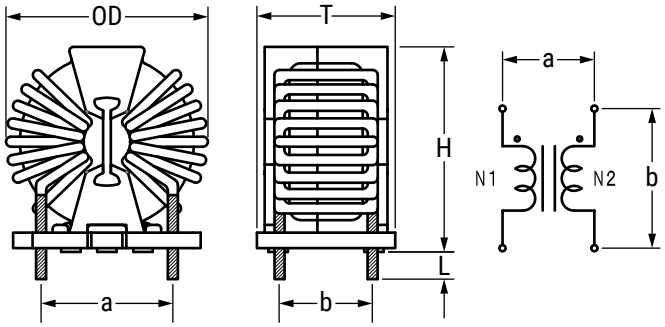

Figure 2

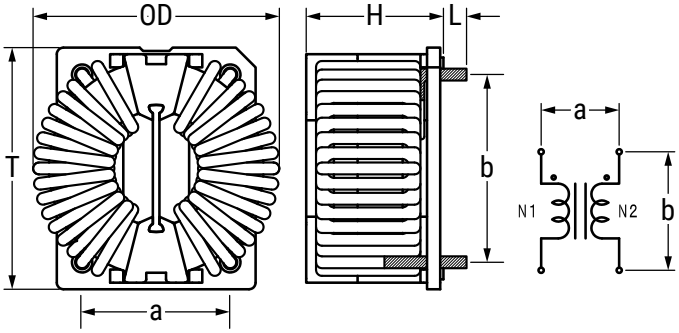

Figure 3

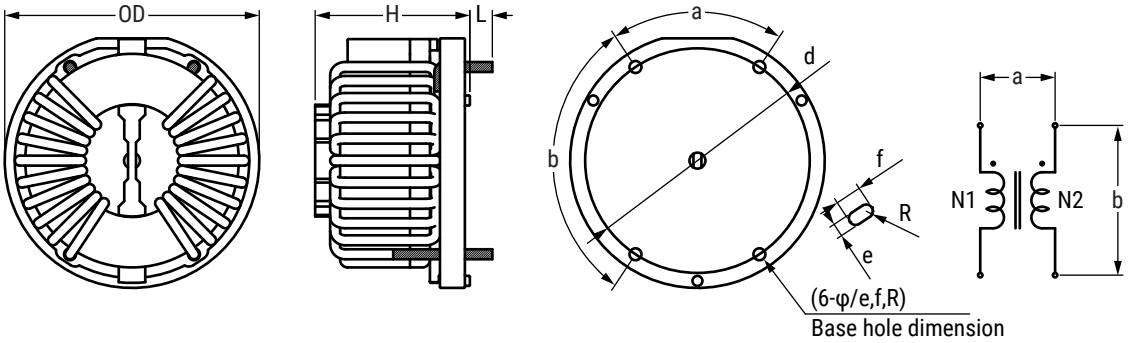

Part Name	Dimensions (mm)				Pin Pitch[1] (Reference)								Figure
	OD (Maximum)	T (Maximum)	H (Maximum)	L	a	b	c	d	φ	e	f	R	
SCF19-JV	27.0 / 28.0	18.4	27.5	3.50 ±0.5	17.0	12.0	-	-	-	-	-	-	Fig. 1
SCF25-JV	34.0 / 35.5 / 37.5	26.0	33.5	3.50 ±0.5	20.5	18.5	-	-	-	-	-	-	Fig. 1
SCF29-JV	39.0 / 40.5 / 41.5	21.4	37.7	3.50 ±0.5	22.5	13.5	-	-	-	-	-	-	Fig. 1
SCF19-JH	27.0 / 28.0	27.0	18.9	3.50 ±0.5	17.0	19.0	-	-	-	-	-	-	Fig. 2
SCF25-JH	34.0 / 35.5 / 37.5	33.0	26.5	3.50 ±0.5	20.5	24.5	-	-	-	-	-	-	Fig. 2
SCF29-JH	39.0 / 40.5 /41.5	37.2	21.9	3.50 ±0.5	22.5	28.5	-	-	-	-	-	-	Fig. 2
SCF39XV-100-1R5A028JH	53.0	-	33.0	4.50 ±0.5	67°	113°	-	45.0	1.7	-	-	-	Fig. 3
SCF39XV-120-1R6A024JH	53.0	-	33.0	4.50 ±0.5	67°	113°	-	45.0	2.1	-	-	-	Fig. 3
SCF39XV-130-1R7A022JH	53.0	-	33.0	4.50 ±0.5	67°	113°	-	45.0	2.1	-	-	-	Fig. 3
SCF39XV-140-1R8A019JH	53.0	-	33.0	4.50 ±0.5	67°	113°	-	45.0	2.1	-	-	-	Fig. 3
SCF39XV-160-1R9A017JH	53.0	-	33.0	4.50 ±0.5	67°	113°	-	45.0	2.4	-	-	-	Fig. 3
SCF39XV-180-2R0A015JH	53.0	-	33.0	4.50 ±0.5	67°	113°	-	45.0	2.4	-	-	-	Fig. 3
SCF39XV-190-2R1A014JH	53.0	-	33.0	4.50 ±0.5	67°	113°	-	45.0	2.4	-	-	-	Fig. 3
SCF39XV-200-2R2A013JH	53.0	-	33.0	4.50 ±0.5	67°	113°	-	45.0	2.7	-	-	-	Fig. 3
SCF39XV-220-2R3A012JH	53.0	-	33.0	4.50 ±0.5	67°	113°	-	45.0	2.7	-	-	-	Fig. 3
SCF39XV-240-2R4A011JH	53.0	-	33.0	4.50 ±0.5	67°	113°	-	45.0	2.7	-	-	-	Fig. 3
SCF39XV-310-1R9B007JH	53.0	-	33.0	4.50 ±0.5	67°	113°	-	45.0	-	2.4	4.65	1.20	Fig. 3
SCF39XV-320-2R0B006JH	53.0	-	33.0	4.50 ±0.5	67°	113°	-	45.0	-	2.4	4.65	1.20	Fig. 3
SCF39XV-400-2R2B005JH	53.0	-	33.0	4.50 ±0.5	67°	113°	-	45.0	-	2.7	5.25	1.35	Fig. 3
SCF39XV-420-2R4B004JH	53.0	-	33.0	4.50 ±0.5	67°	113°	-	45.0	-	2.7	5.25	1.35	Fig. 3

[1] Pin pitch listed above for reference only. Values not guaranteed.

Dimensions – Millimeters cont.

Figure 4

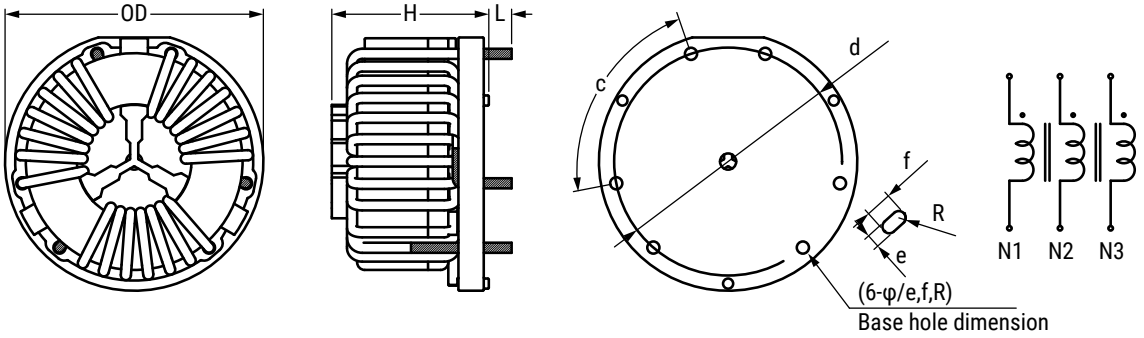

Figure 5

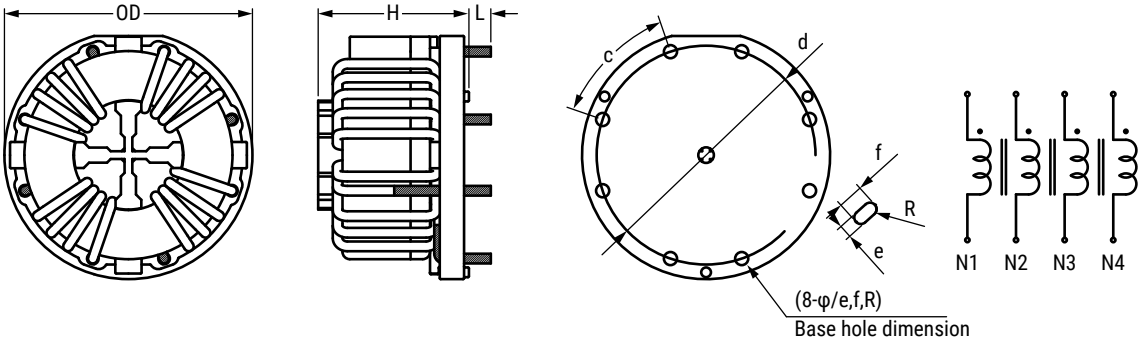

Part Name	Dimensions (mm)				Pin Pitch[1] (Reference)								Figure
	OD (Maximum)	T (Maximum)	H (Maximum)	L	a	b	c	d	φ	e	f	R	
SCF39XV-120-S1R5A017JH	53.0	-	33.0	4.50 ±0.5	-	-	82°	45.0	1.7	-	-	-	Fig. 4
SCF39XV-140-S1R6A014JH	53.0	-	33.0	4.50 ±0.5	-	-	82°	45.0	2.1	-	-	-	Fig. 4
SCF39XV-150-S1R7A011JH	53.0	-	33.0	4.50 ±0.5	-	-	82°	45.0	2.1	-	-	-	Fig. 4
SCF39XV-190-S1R9A009JH	53.0	-	33.0	4.50 ±0.5	-	-	82°	45.0	2.4	-	-	-	Fig. 4
SCF39XV-210-S2R0A008JH	53.0	-	33.0	4.50 ±0.5	-	-	82°	45.0	2.4	-	-	-	Fig. 4
SCF39XV-230-S2R2A007JH	53.0	-	33.0	4.50 ±0.5	-	-	82°	45.0	2.7	-	-	-	Fig. 4
SCF39XV-280-S2R4A006JH	53.0	-	33.0	4.50 ±0.5	-	-	82°	45.0	2.7	-	-	-	Fig. 4
SCF39XV-400-S2R2B003JH	53.0	-	33.0	4.50 ±0.5	-	-	82°	45.0	-	2.7	5.25	1.35	Fig. 4
SCF39XV-110-Y1R4A008JH	53.0	-	33.0	4.50 ±0.5	-	-	52°	45.0	1.7	-	-	-	Fig. 5
SCF39XV-140-Y1R6A007JH	53.0	-	33.0	4.50 ±0.5	-	-	52°	45.0	2.1	-	-	-	Fig. 5
SCF39XV-170-Y1R8A006JH	53.0	-	33.0	4.50 ±0.5	-	-	52°	45.0	2.1	-	-	-	Fig. 5
SCF39XV-230-Y2R2A005JH	53.0	-	33.0	4.50 ±0.5	-	-	52°	45.0	2.7	-	-	-	Fig. 5
SCF39XV-290-Y2R4A004JH	53.0	-	33.0	4.50 ±0.5	-	-	52°	45.0	2.7	-	-	-	Fig. 5
SCF39XV-400-Y2R0B003JH	53.0	-	33.0	4.50 ±0.5	-	-	52°	45.0	-	2.4	4.65	1.20	Fig. 5

[1] Pin pitch listed above for reference only. Values not guaranteed.

Dimensions – Millimeters cont.

Figure 6

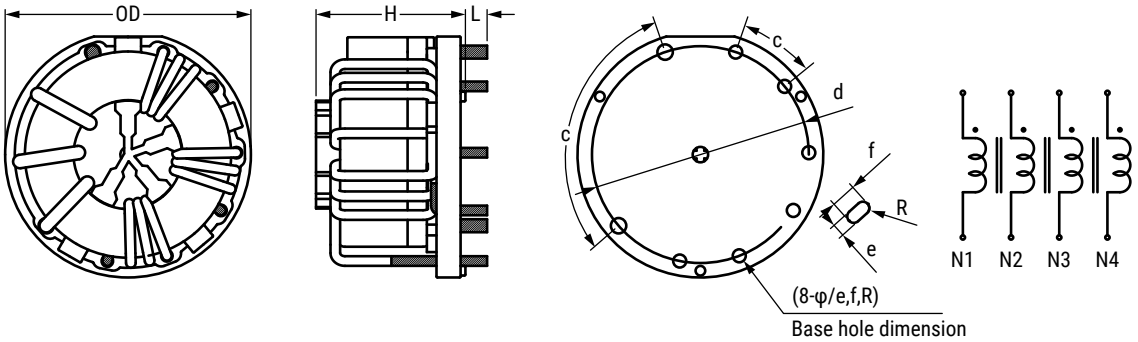

Part Name	Dimensions (mm)				Pin Pitch[1] (Reference)								Figure
	OD (Maximum)	T (Maximum)	H (Maximum)	L	a	b	c	d	φ	e	f	R	
SCF39XV-200-Z2R1A012JH	53.0	-	33.0	4.50 ±0.5	-	-	112°/32°	45.0	2.4/1.4	-	-	-	Fig. 6
SCF39XV-240-Z2R3A010JH	53.0	-	33.0	4.50 ±0.5	-	-	112°/32°	45.0	2.7/1.7	-	-	-	Fig. 6
SCF39XV-270-Z2R4A009JH	53.0	-	33.0	4.50 ±0.5	-	-	112°/32°	45.0	2.7/1.7	-	-	-	Fig. 6
SCF39XV-310-Z1R8B008JH	53.0	-	33.0	4.50 ±0.5	-	-	112°/32°	45.0	-/1.7	2.1	4.1	1.05	Fig. 6
SCF39XV-350-Z1R9B007JH	53.0	-	33.0	4.50 ±0.5	-	-	112°/32°	45.0	-/2.1	2.4	4.7	1.20	Fig. 6
SCF39XV-440-Z2R0B005JH	53.0	-	33.0	4.50 ±0.5	-	-	112°/32°	45.0	-/2.1	2.4	4.7	1.20	Fig. 6
SCF39XV-500-Z2R4B004JH	53.0	-	33.0	4.50 ±0.5	-	-	112°/32°	45.0	-/2.4	2.7	5.3	1.35	Fig. 6

[1] Pin pitch listed above for reference only. Values not guaranteed.

Environmental Compliance

All KEMET AC line filters are RoHS Compliant.

Performance Characteristics

Item	Performance Characteristics
Rated Voltage	1,000 VAC/VDC
Withstanding Voltage	2,400 VAC (2 seconds, between lines)
Insulation Resistance	> 100 MΩ at 1,000 VDC (between lines)
Rated Current Range	5 – 50 A
Rated Inductance Range	0.11 – 21.2 mH +50%, −30%
Inductance Measurement Condition	100 kHz
Operating Temperature Range	−40°C to +150°C (include self temperature rise)

Table 1 – Ratings & Part Number Reference

Part Number	Rated Voltage AC/DC (V)	Rated Current (A)	Inductance[1] (mH) +50%,−30%	DC Resistance/ Line (mΩ) ±13%	Temperature Rise (K) Maximum	Wire Diameter (mm)	Weight (g) Approximate	OD (mm)
SCF19XV-080-1R0A011JV	1,000	8	1.500[1]	8.700[2]	55	1.0	16.3	27.0
SCF19XV-100-1R1A009JV	1,000	10	1.000[1]	6.030[2]	45	1.1	16.3	27.0
SCF19XV-120-1R2A007JV	1,000	12	0.600[1]	3.990[2]	50	1.2	16.2	27.0
SCF19XV-150-1R3A006JV	1,000	15	0.440[1]	2.910[2]	50	1.3	16.2	27.0
SCF19XV-190-1R5A005JV	1,000	19	0.300[1]	1.890[2]	50	1.5	17.0	28.0
SCF19XV-220-1R6A004JV	1,000	22	0.200[1]	1.380[2]	50	1.6	16.9	28.0
SCF19XV-300-1R9A003JV	1,000	30	0.110[1]	0.747[2]	55	1.9	17.4	28.0
SCF19XV-080-1R0A011JH	1,000	8	1.500[1]	8.980[2]	55	1.0	17.2	27.0
SCF19XV-100-1R1A009JH	1,000	10	1.000[1]	6.230[2]	45	1.1	16.8	27.0
SCF19XV-120-1R2A007JH	1,000	12	0.600[1]	4.190[2]	50	1.2	16.9	27.0
SCF19XV-150-1R3A006JH	1,000	15	0.440[1]	3.010[2]	50	1.3	16.8	27.0
SCF19XV-190-1R5A005JH	1,000	19	0.300[1]	1.950[2]	50	1.5	17.8	28.0
SCF19XV-220-1R6A004JH	1,000	22	0.200[1]	1.430[2]	50	1.6	17.1	28.0
SCF19XV-300-1R9A003JH	1,000	30	0.110[1]	0.767[2]	55	1.9	18.5	28.0
SCF25XV-050-1R0A027JV	1,000	5	17.800[1]	30.590[2]	45	1.0	49.4	34.0
SCF25XV-070-1R1A022JV	1,000	7	11.800[1]	20.830[2]	55	1.1	49.1	34.0
SCF25XV-080-1R2A018JV	1,000	8	7.900[1]	14.410[2]	50	1.2	49.3	34.0
SCF25XV-100-1R3A016JV	1,000	10	6.300[1]	10.910[2]	55	1.3	50.2	35.5
SCF25XV-110-1R4A013JV	1,000	11	4.100[1]	7.720[2]	50	1.4	49.3	35.5
SCF25XV-130-1R5A012JV	1,000	13	3.500[1]	6.330[2]	55	1.5	49.2	35.5
SCF25XV-150-1R6A010JV	1,000	15	2.500[1]	4.620[2]	50	1.6	49.7	35.5
SCF25XV-170-1R7A009JV	1,000	17	2.000[1]	3.710[2]	55	1.7	50.4	35.5
SCF25XV-190-1R8A008JV	1,000	19	1.600[1]	2.980[2]	55	1.8	50.1	35.5
SCF25XV-220-1R9A007JV	1,000	22	1.200[1]	2.350[2]	55	1.9	50.5	37.5
SCF25XV-240-2R0A006JV	1,000	24	0.900[1]	1.840[2]	55	2.0	48.5	37.5
SCF25XV-280-2R1A005JV	1,000	28	0.600[1]	1.390[2]	55	2.1	47.8	37.5
SCF25XV-310-2R3A004JV	1,000	31	0.400[1]	0.950[2]	50	2.3	48.4	37.5
SCF25XV-350-2R4A003JV	1,000	35	0.220[1]	0.650[2]	50	2.4	44.3	37.5
Part Number	**Rated Voltage AC/DC (V)**	**Rated Current (A)**	**Inductance (mH) +50%, −30%**	**DC Resistance/ Line (mΩ) ±13%**	**Temperature Rise (K) Maximum**	**Wire Diameter (mm)**	**Weight (g) Approximate**	**OD (mm)**

[1] ***Inductance Measurement Condition: 100 kHz***

[2] DC Resistance/Line speci f cation : ±13%

[3] DC Resistance/Line speci f cation : ±23%

Table 1 – Ratings & Part Number Reference cont.

Part Number	Rated Voltage AC/DC (V)	Rated Current (A)	Inductance[1] (mH) +50%,–30%	DC Resistance/ Line (mΩ) ±13%	Temperature Rise (K) Maximum	Wire Diameter (mm)	Weight (g) Approximate	OD (mm)
SCF25XV-050-1R0A027JH	1,000	5	17.800[1]	32.600[2]	45	1.0	49.8	34.0
SCF25XV-070-1R1A022JH	1,000	7	11.800[1]	21.350[2]	55	1.1	49.2	34.0
SCF25XV-080-1R2A018JH	1,000	8	7.900[1]	14.700[2]	50	1.2	49.4	34.0
SCF25XV-100-1R3A016JH	1,000	10	6.300[1]	11.100[2]	55	1.3	50.7	35.5
SCF25XV-110-1R4A013JH	1,000	11	4.100[1]	7.890[2]	50	1.4	49.7	35.5
SCF25XV-130-1R5A012JH	1,000	13	3.500[1]	6.430[2]	55	1.5	51.3	35.5
SCF25XV-150-1R6A010JH	1,000	15	2.500[1]	4.740[2]	50	1.6	51.0	35.5
SCF25XV-170-1R7A009JH	1,000	17	2.000[1]	3.830[2]	55	1.7	51.2	35.5
SCF25XV-190-1R8A008JH	1,000	19	1.600[1]	3.070[2]	55	1.8	51.8	35.5
SCF25XV-220-1R9A007JH	1,000	22	1.200[1]	2.450[2]	55	1.9	50.6	37.5
SCF25XV-240-2R0A006JH	1,000	24	0.900[1]	1.920[2]	55	2.0	50.0	37.5
SCF25XV-280-2R1A005JH	1,000	28	0.600[1]	1.440[2]	55	2.1	48.9	37.5
SCF25XV-310-2R3A004JH	1,000	31	0.400[1]	1.000[2]	50	2.3	49.4	37.5
SCF25XV-350-2R4A003JH	1,000	35	0.220[1]	0.700[2]	50	2.4	46.8	37.5
SCF29XV-050-1R0A044JV	1,000	5	21.200[1]	40.300[2]	55	1.0	47.2	39.0
SCF29XV-060-1R1A036JV	1000	6	14.200[1]	27.200[2]	55	1.1	47.8	39.0
SCF29XV-070-1R2A030JV	1000	7	9.900[1]	19.200[2]	50	1.2	47.3	39.0
SCF29XV-080-1R3A026JV	1000	8	7.400[1]	14.200[2]	45	1.3	47.9	39.0
SCF29XV-090-1R4A022JV	1000	9	5.300[1]	10.200[2]	40	1.4	48.2	39.0
SCF29XV-110-1R5A019JV	1000	11	4.000[1]	8.000[2]	45	1.5	48.6	40.5
SCF29XV-120-1R6A017JV	1000	12	3.200[1]	6.430[2]	40	1.6	49.0	40.5
SCF29XV-150-1R7A015JV	1000	15	2.500[1]	5.040[2]	55	1.7	49.5	40.5
SCF29XV-180-1R8A013JV	1000	18	1.900[1]	3.990[2]	60	1.8	48.8	40.5
SCF29XV-190-1R9A012JV	1000	19	1.600[1]	3.280[2]	55	1.9	49.5	41.5
SCF29XV-200-2R0A011JV	1000	20	1.300[1]	2.730[2]	50	2.0	50.8	41.5
SCF29XV-210-2R1A010JV	1000	21	1.100[1]	2.300[2]	45	2.1	51.5	41.5
SCF29XV-250-2R2A008JV	1000	25	0.700[1]	1.680[2]	50	2.2	47.0	41.5
SCF29XV-270-2R3A006JV	1000	27	0.400[1]	1.190[2]	45	2.3	43.8	41.5
SCF29XV-300-2R4A005JV	1000	30	0.270[1]	0.930[2]	45	2.4	43.0	41.5
SCF29XV-050-1R0A044JH	1,000	5	21.200[1]	39.900[2]	55	1.0	47.8	39.0
SCF29XV-060-1R1A036JH	1,000	6	14.200[1]	27.400[2]	55	1.1	48.5	39.0
SCF29XV-070-1R2A030JH	1,000	7	9.900[1]	19.200[2]	50	1.2	48.1	39.0
SCF29XV-080-1R3A026JH	1,000	8	7.400[1]	14.200[2]	45	1.3	49.0	39.0
SCF29XV-090-1R4A022JH	1,000	9	5.300[1]	10.600[2]	40	1.4	49.3	39.0
SCF29XV-110-1R5A019JH	1,000	11	4.000[1]	8.070[2]	45	1.5	49.6	40.5
SCF29XV-120-1R6A017JH	1,000	12	3.200[1]	6.450[2]	40	1.6	50.2	40.5
SCF29XV-150-1R7A015JH	1,000	15	2.500[1]	5.140[2]	55	1.7	50.7	40.5
SCF29XV-180-1R8A013JH	1,000	18	1.900[1]	4.100[2]	60	1.8	49.5	40.5
SCF29XV-190-1R9A012JH	1,000	19	1.600[1]	3.350[2]	55	1.9	51.5	41.5
SCF29XV-200-2R0A011JH	1,000	20	1.300[1]	2.840[2]	50	2.0	52.1	41.5
SCF29XV-210-2R1A010JH	1,000	21	1.100[1]	2.330[2]	45	2.1	53.2	41.5
SCF29XV-250-2R2A008JH	1,000	25	0.700[1]	1.680[2]	50	2.2	49.4	41.5
SCF29XV-270-2R3A006JH	1,000	27	0.400[1]	1.180[2]	45	2.3	45.1	41.5
SCF29XV-300-2R4A005JH	1,000	30	0.270[1]	0.920[2]	45	2.4	44.3	41.5
Part Number	**Rated Voltage AC/DC (V)**	**Rated Current (A)**	**Inductance (mH) +50%, –30%**	**DC Resistance/ Line (mΩ) ±13%**	**Temperature Rise (K) Maximum**	**Wire Diameter (mm)**	**Weight (g) Approximate**	**OD (mm)**

[1] ***Inductance Measurement Condition: 100 kHz***

[2] DC Resistance/Line speci f cation : ±13%

[3] DC Resistance/Line speci f cation : ±23%

Table 1 – Ratings & Part Number Reference cont.

Part Number	Rated Voltage AC/DC (V)	Rated Current (A)	Inductance[1] (mH) +50%,–30%	DC Resistance/ Line (mΩ) ±13%	Temperature Rise (K) Maximum	Wire Diameter (mm)	Weight (g) Approximate	OD (mm)
SCF39XV-100-1R5A028JH	1,000	10	19.500[1]	17.910[2]	50	1.5	132.3	53.0
SCF39XV-120-1R6A024JH	1,000	12	14.400[1]	13.600[2]	60	1.6	129.4	53.0
SCF39XV-130-1R7A022JH	1,000	13	12.100[1]	11.100[2]	60	1.7	132.7	53.0
SCF39XV-140-1R8A019JH	1,000	14	9.000[1]	8.660[2]	55	1.8	130.1	53.0
SCF39XV-160-1R9A017JH	1,000	16	7.200[1]	7.120[2]	55	1.9	128.6	53.0
SCF39XV-180-2R0A015JH	1,000	18	5.600[1]	5.980[2]	60	2.0	128.7	53.0
SCF39XV-190-2R1A014JH	1,000	19	4.900[1]	5.030[2]	50	2.1	128.7	53.0
SCF39XV-200-2R2A013JH	1,000	20	4.200[1]	4.280[2]	65	2.2	133.9	53.0
SCF39XV-220-2R3A012JH	1,000	22	3.600[1]	3.580[2]	50	2.3	132.8	53.0
SCF39XV-240-2R4A011JH	1,000	24	3.000[1]	3.040[2]	60	2.4	139.2	53.0
SCF39XV-310-1R9B007JH	1,000	31	1.200[1]	1.480[3]	55	1.9 x 2 Parallel	119.7	53.0
SCF39XV-320-2R0B006JH	1,000	32	0.900[1]	1.130[3]	50	2.0 x 2 Parallel	117.9	53.0
SCF39XV-400-2R2B005JH	1,000	40	0.620[1]	0.780[3]	60	2.2 x 2 Parallel	123.5	53.0
SCF39XV-420-2R4B004JH	1,000	42	0.400[1]	0.530[3]	60	2.4 x 2 Parallel	126.1	53.0
SCF39XV-120-S1R5A017JH	1,000	12	7.200[1]	10.600[2]	55	1.5	126.5	53.0
SCF39XV-140-S1R6A014JH	1,000	14	4.900[1]	7.870[2]	50	1.6	124.8	53.0
SCF39XV-150-S1R7A011JH	1,000	15	3.000[1]	5.450[2]	50	1.7	119.8	53.0
SCF39XV-190-S1R9A009JH	1,000	19	2.000[1]	3.690[2]	60	1.9	122.2	53.0
SCF39XV-210-S2R0A008JH	1,000	21	1.600[1]	3.000[2]	60	2.0	122.3	53.0
SCF39XV-230-S2R2A007JH	1,000	23	1.200[1]	2.230[2]	55	2.2	127.0	53.0
SCF39XV-280-S2R4A006JH	1,000	28	0.900[1]	1.610[2]	55	2.4	128.8	53.0
SCF39XV-400-S2R2B003JH	1,000	40	0.220[1]	0.400[3]	45	2.2 x 2 Parallel	122.1	53.0
SCF39XV-110-Y1R4A008JH	1,000	11	1.600[1]	5.870[2]	60	1.4	108.8	53.0
SCF39XV-140-Y1R6A007JH	1,000	14	1.200[1]	4.040[2]	60	1.6	114.1	53.0
SCF39XV-170-Y1R8A006JH	1,000	17	0.900[1]	2.830[2]	60	1.8	118.9	53.0
SCF39XV-230-Y2R2A005JH	1,000	23	0.620[1]	1.610[2]	55	2.2	130.9	53.0
SCF39XV-290-Y2R4A004JH	1,000	29	0.400[1]	1.100[2]	55	2.4	130.3	53.0
SCF39XV-400-Y2R0B003JH	1,000	40	0.230[1]	0.530[2]	55	2.0 x 2 Parallel	133.4	53.0
SCF39XV-200-Z2R1A012JH	1,000	20	3.600[1]	4.140[2]	50	2.1/1.2	127.5	53.0
SCF39XV-240-Z2R3A010JH	1,000	24	2.500[1]	2.960[2]	55	2.3/1.3	127.8	53.0
SCF39XV-270-Z2R4A009JH	1,000	27	2.000[1]	2.440[2]	60	2.4/1.4	129.4	53.0
SCF39XV-310-Z1R8B008JH	1,000	31	1.600[1]	1.840[3]	60	1.8 x 2 Parallel/1.5	129.6	53.0
SCF39XV-350-Z1R9B007JH	1,000	35	1.200[1]	1.420[3]	55	1.9 x 2 Parallel/1.6	130.1	53.0
SCF39XV-440-Z2R0B005JH	1,000	44	0.620[1]	0.950[3]	65	2.0 x 2 Parallel/1.7	120.2	53.0
SCF39XV-500-Z2R4B004JH	1,000	50	0.400[1]	0.510[3]	60	2.4 x 2 Parallel/2.0	127.6	53.0
Part Number	**Rated Voltage AC/DC (V)**	**Rated Current (A)**	**Inductance (mH) +50%, –30%**	**DC Resistance/ Line (mΩ) ±13%**	**Temperature Rise (K) Maximum**	**Wire Diameter (mm)**	**Weight (g) Approximate**	**OD (mm)**

[1] ***Inductance Measurement Condition: 100 kHz***

[2] DC Resistance/Line specification : ±13%

[3] DC Resistance/Line specification : ±23%

Frequency Characteristics

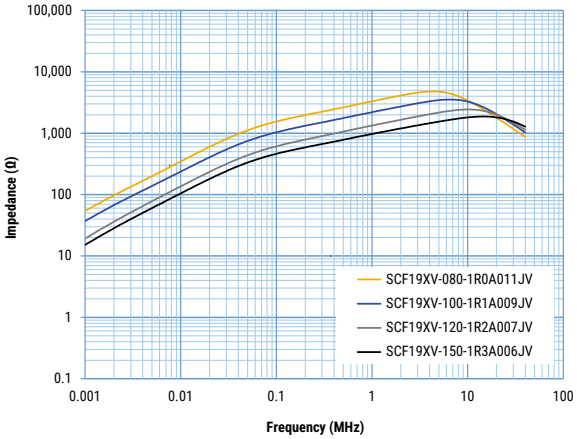

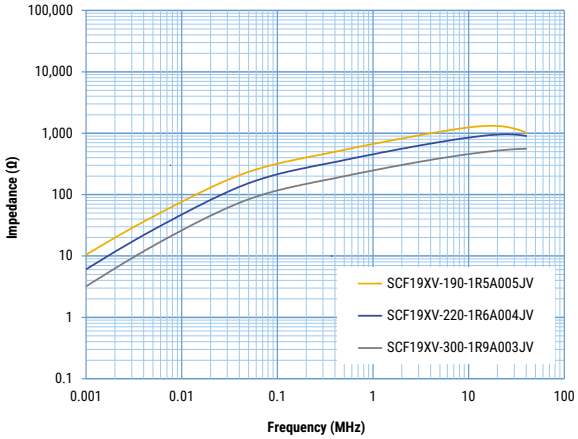

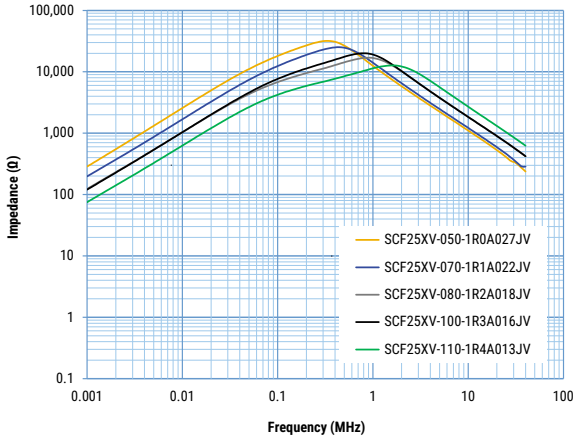

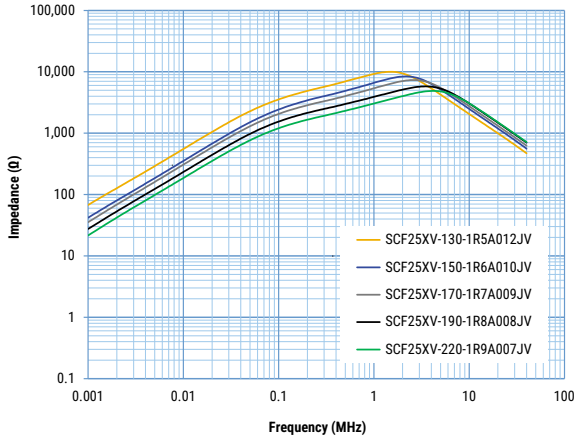

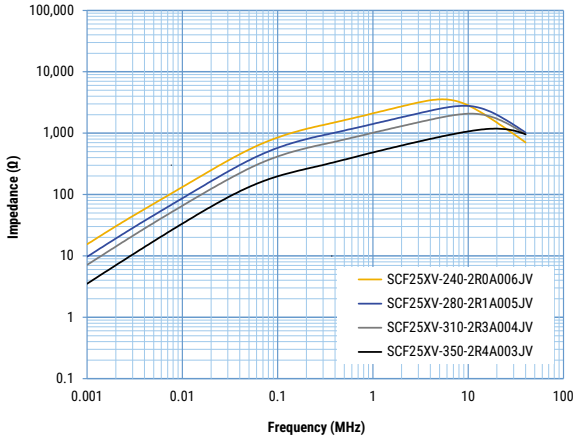

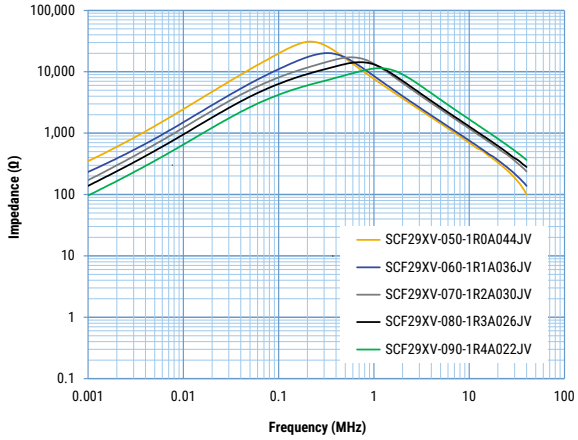

Frequency Characteristics cont.

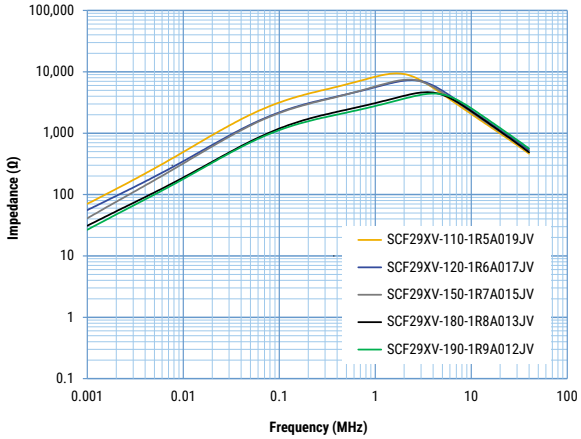

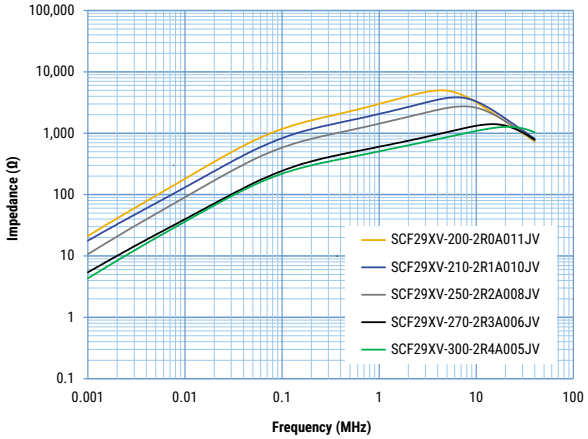

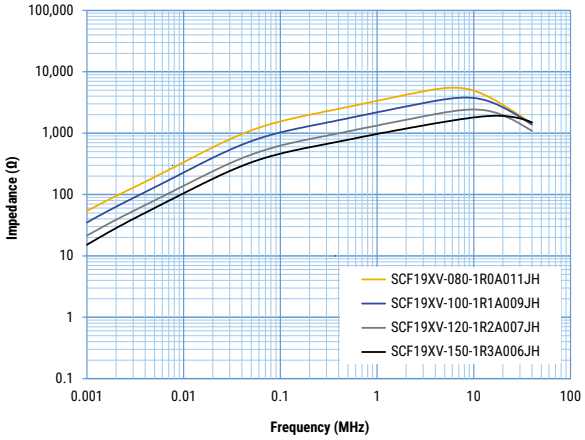

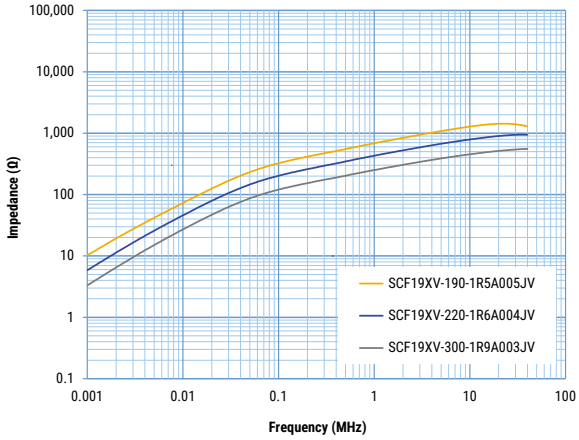

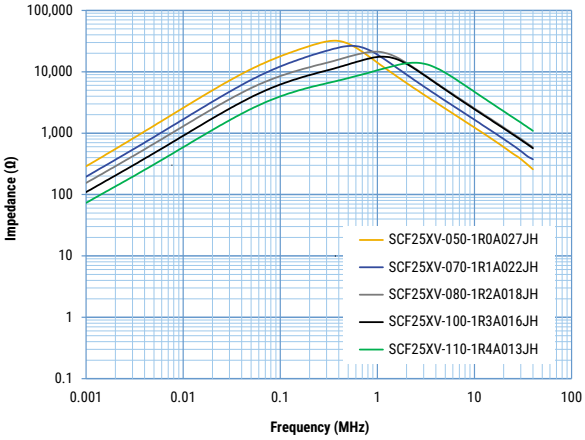

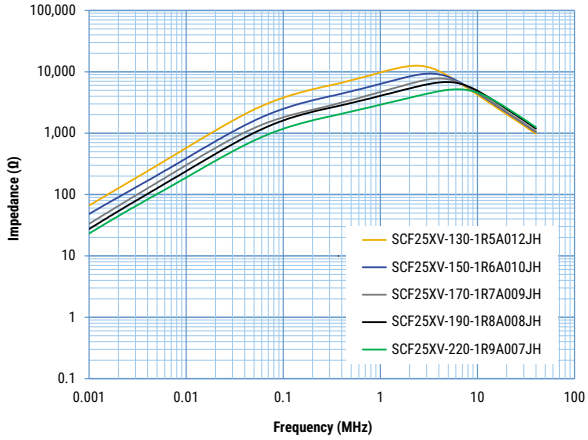

Frequency Characteristics cont.

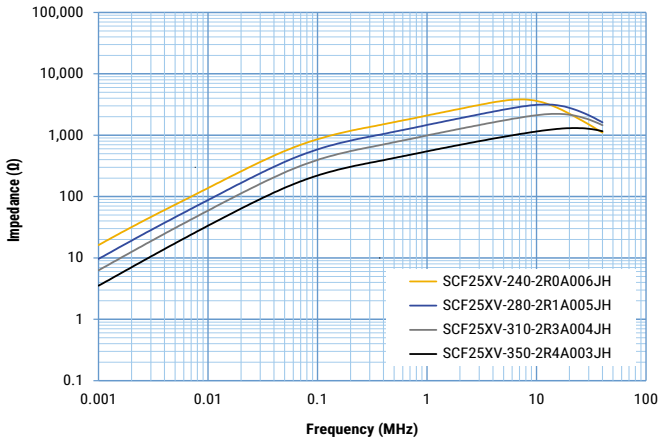

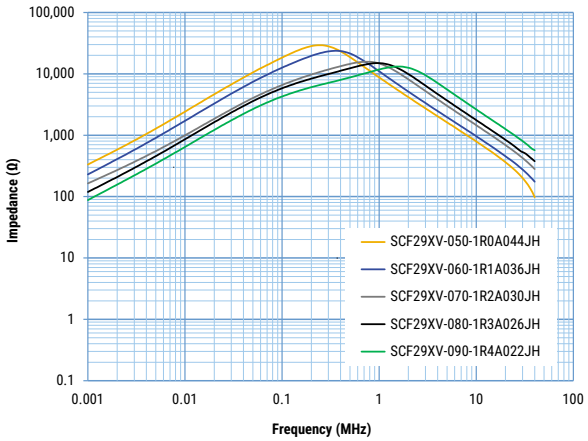

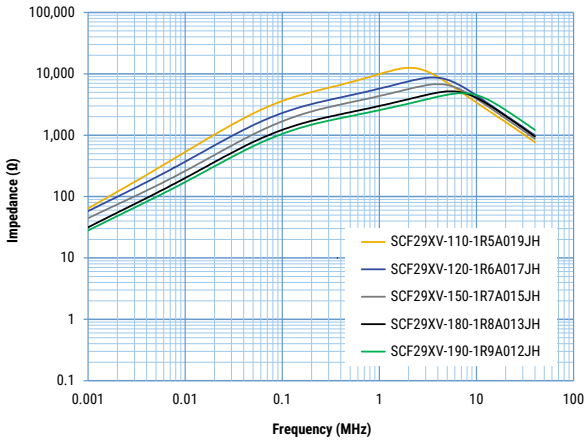

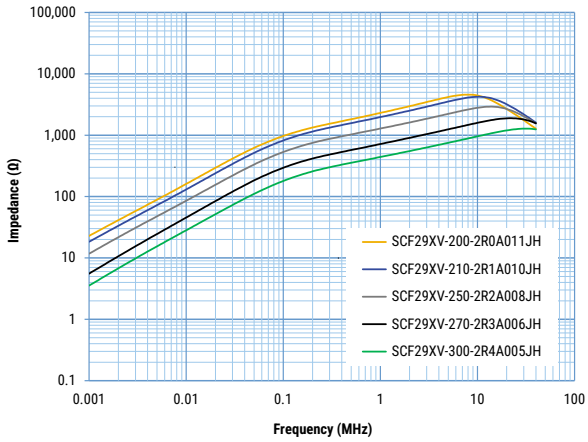

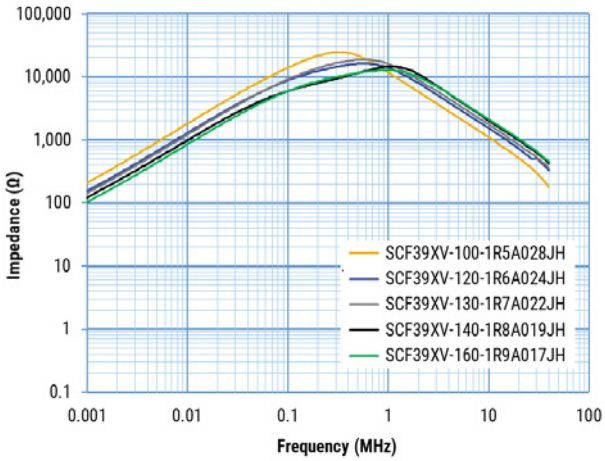

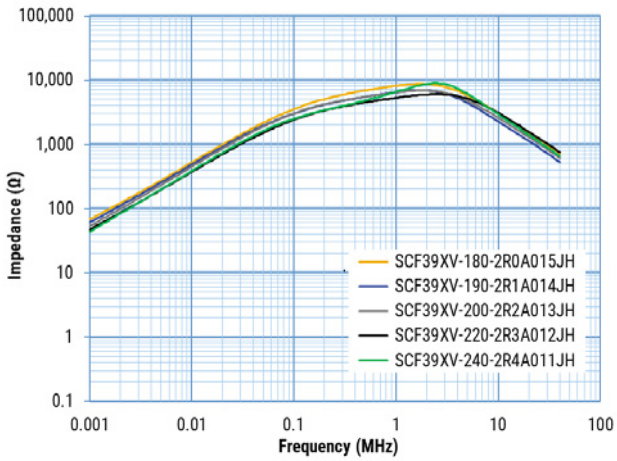

Frequency Characteristics cont.

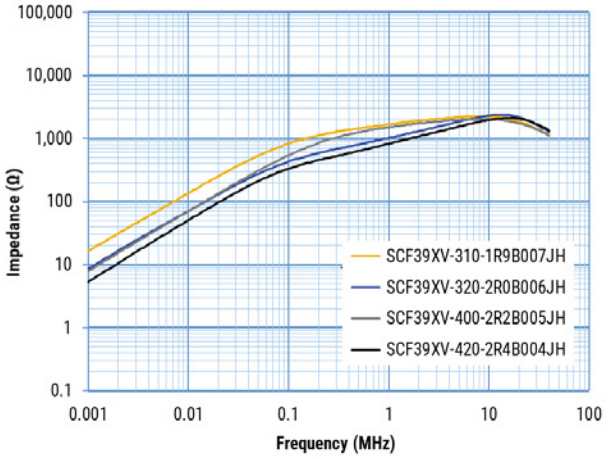

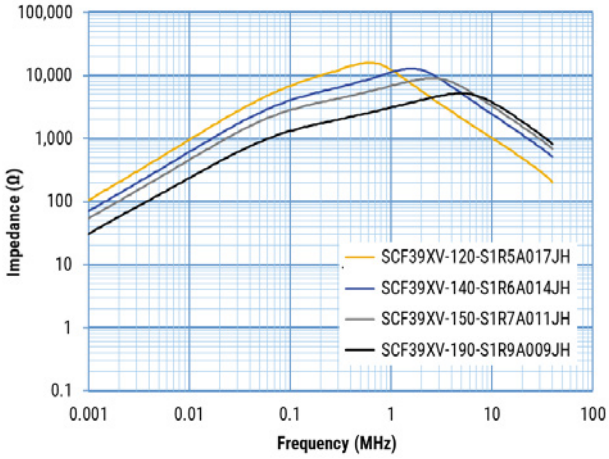

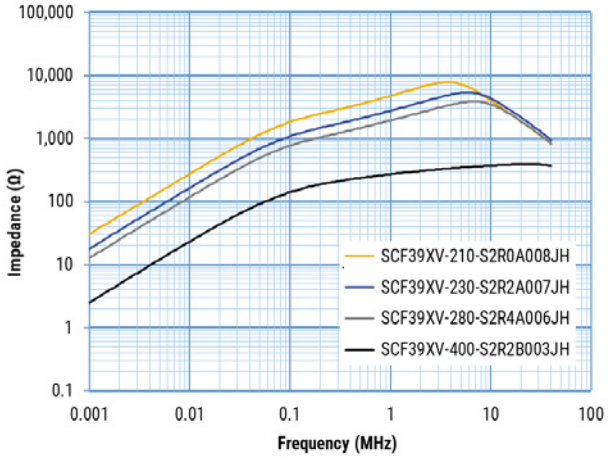

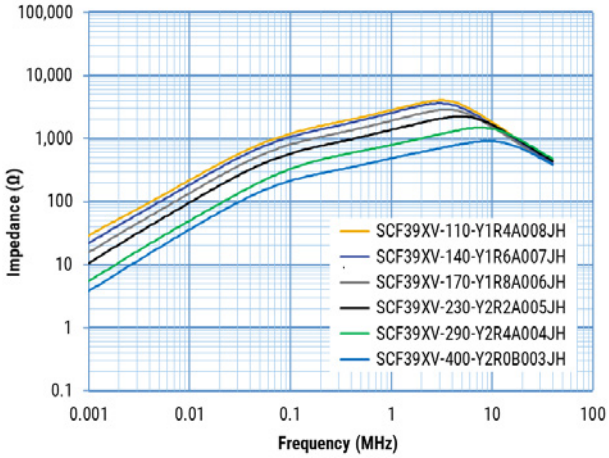

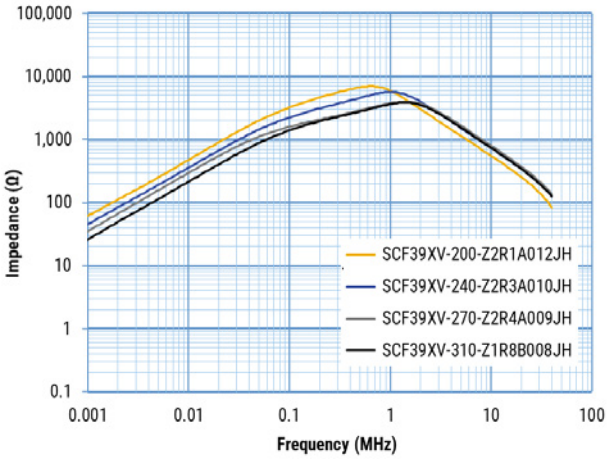

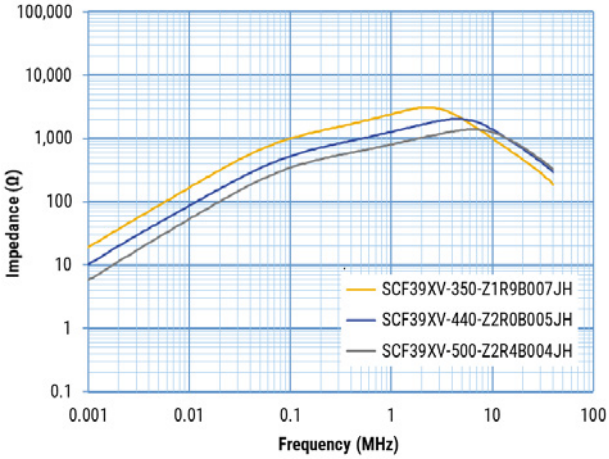

Packaging

Type	Packaging Type	Pieces Per Box
SCF19XV-JV	Tray	210
SCF19XV-JH		150
SCF25XV-JV	Tray	140
SCF25XV-JH		120
SCF29XV-JV	Tray	120
SCF29XV-JH		80
SCF39XV-JH	Tray	48

Handling Precautions

Precautions for product storage
AC Line Filters should be stored in normal working environments. While the chokes themselves are quite robust in other environments, solderability will be degraded by exposure to high temperatures, high humidity, corrosive atmospheres, and long term storage.

KEMET recommends that maximum storage temperature not exceed 40°C and maximum storage humidity not exceed 70% relative humidity. Atmospheres should be free of chlorine and sulfur bearing compounds. Temperature fluctuations should be minimized to avoid condensation on the parts. Avoid storage near strong magnetic fields, as this might magnetize the product.

For optimized solderability, AC line filters stock should be used promptly and preferably within 6 months of receipt.

Product temperature rise values
The values listed for temperature rise are the result of self-heating in wires when the rated current (commercial frequency) is applied.

When using the product, check and evaluate the value of the core temperature rise under actual operating conditions.

KEMET Electronics Corporation Sales Offices

For a complete list of our global sales offices, please visit www.kemet.com/sales.

Disclaimer

YAGEO Corporation and its affiliates do not recommend the use of commercial or automotive grade products for high reliability applications or manned space flight.

All product specifications, statements, information and data (collectively, the "Information") in this datasheet are subject to change. The customer is responsible for checking and verifying the extent to which the Information contained in this publication is applicable to an order at the time the order is placed. All Information given herein is believed to be accurate and reliable, but it is presented without guarantee, warranty, or responsibility of any kind, expressed or implied.

Statements of suitability for certain applications are based on KEMET Electronics Corporation's ("KEMET") knowledge of typical operating conditions for such applications, but are not intended to constitute – and KEMET specifically disclaims – any warranty concerning suitability for a specific customer application or use. The Information is intended for use only by customers who have the requisite experience and capability to determine the correct products for their application. Any technical advice inferred from this Information or otherwise provided by KEMET with reference to the use of KEMET's products is given gratis, and KEMET assumes no obligation or liability for the advice given or results obtained.

Although KEMET designs and manufactures its products to the most stringent quality and safety standards, given the current state of the art, isolated component failures may still occur. Accordingly, customer applications which require a high degree of reliability or safety should employ suitable designs or other safeguards (such as installation of protective circuitry or redundancies) in order to ensure that the failure of an electrical component does not result in a risk of personal injury or property damage.

Although all product–related warnings, cautions and notes must be observed, the customer should not assume that all safety measures are indicated or that other measures may not be required.

When providing KEMET products and technologies contained herein to other countries, the customer must abide by the procedures and provisions stipulated in all applicable export laws and regulations, including without limitation the International Traffic in Arms Regulations (ITAR), the US Export Administration Regulations (EAR) and the Japan Foreign Exchange and Foreign Trade Act.

KEMET is a registered trademark of KEMET Electronics Corporation.