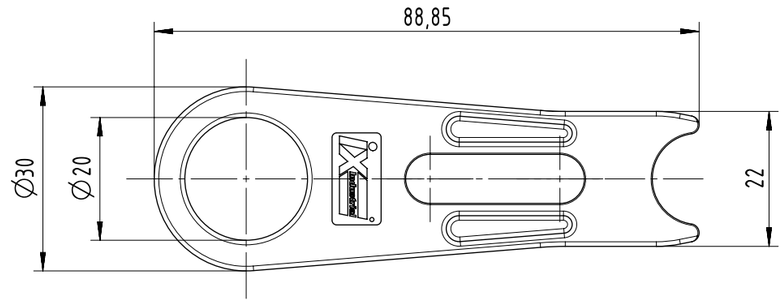

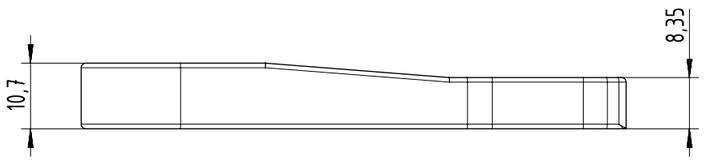

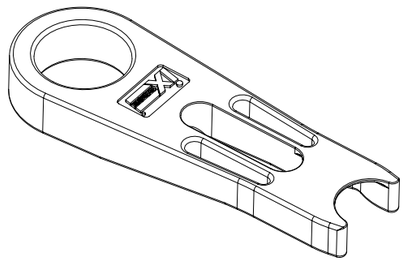

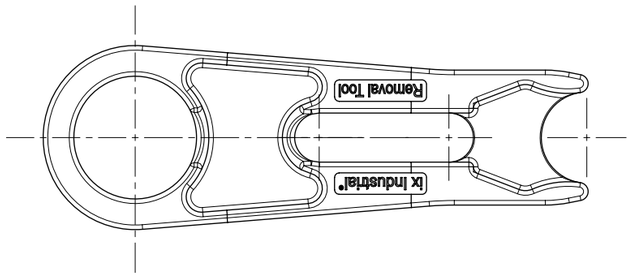

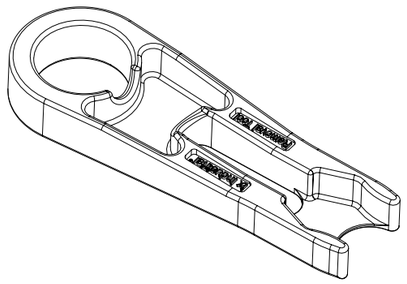

All Dimensions in mm Original Size DIN A3	Scale 1:1	Free size tol.		Ref. Sub.	
All rights reserved Department EL PD	Created by HASELOH	Inspected by SCHWARZA	Standardisation HOFFMANN	Date 08-Apr-2024	State 40 - Released
HARTING Electronics GmbH D-32339 Espelkamp	Title ix Industrial Removal Tool				Doc-Key / ECM-Nr. 100807454/UGD/001/A 500000166226
	Type TB	Number 09458000182		Rev. A	Page 1/1

A3