PART NUMBER	SSF-LXHM250IGIGW	REV	E

REV	E.C.N. NUMBER AND REVISION COMMENTS	DATE
A	CHANGED LEAD LENGTH	10.18.93
B	E.C.N. #10305	02.05.97
C	E.C.N. #10333	04.17.97
D	E.C.N. #10500 & #10BRDR. & REDRAWN	04.07.99
E	ECN-Lumex202400015	04.10.24

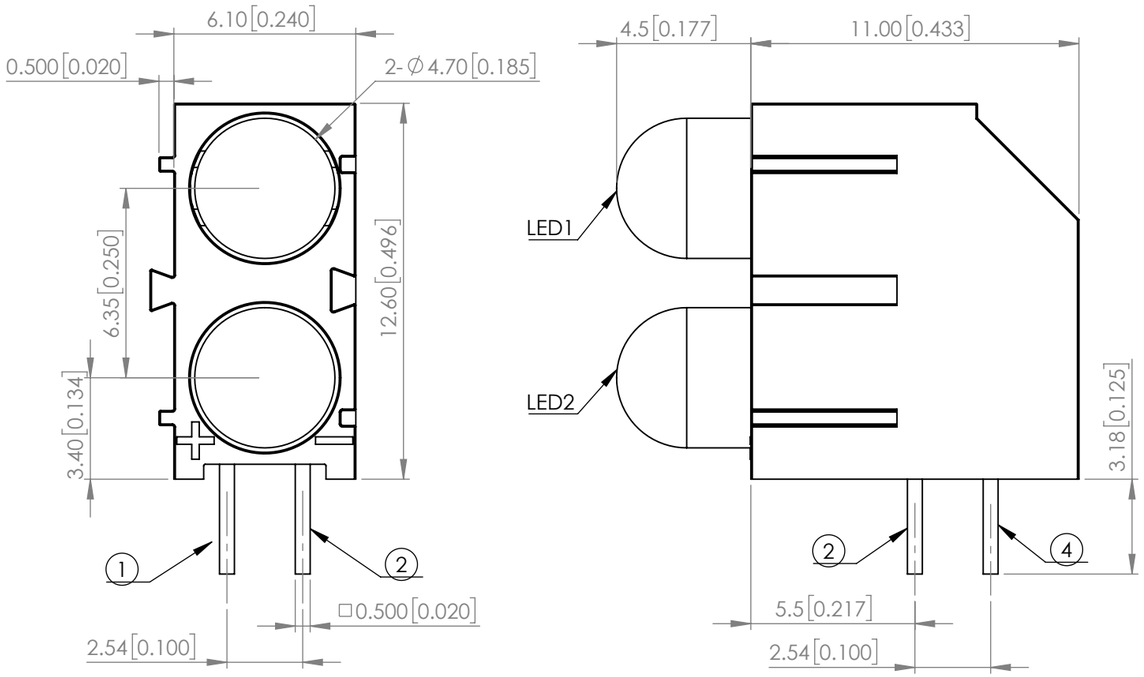

POLARITY

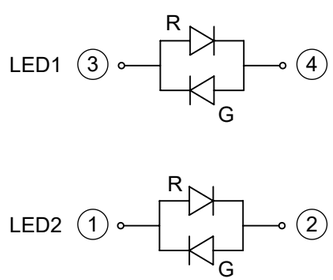

ELECTRO-OPTICAL CHARACTERISTIC TA=25℃

PARAMETER		MIN	TYP	MAX	UNITS	TEST COND
PEAK WAVELENGTH	R	-	625	-	nm	If=20mA
	G	-	565	-		
FORWARD VOLTAGE	R	-	2.0	2.5	Vf	If=20mA
	G	-	2.2	2.5		
LUMINOUS INTENSITY	R	-	15	-	mcd	If=20mA
	G	-	25	-		
VIEWING ANGLE		-	30	-	2x theta1/2	-
EMITTED COLOR		RED / GREEN BICOLOR				
EPOXY LENS FINISH		WHITE DIFFUSED				

ABSOLUTE MAXIMUM RATINGS TA=25℃

PARAMETER	MAX	UNITS
PEAK FORWARD CURRENT(R/G)*	150/140	mA
FORWARD CURRENT(R/G)	30/25	mA
POWER DISSIPATION(R/G)	75/63	mW
STORAGE TEMPERATURE	-40 TO +85	℃
OPERATING TEMPERATURE	-40 TO +85	℃
LEAD SOLDERING TEMPERATURE**	3SEC MAX @ 260℃	℃

***1/10 DUTY CYCLE, 0.1mS PLUSE WIDTH.**

NOTES

1. LED：SSL-LX509F3IGW*2
2. HOLDER：SSH-LXHM250, BLACK HOLDER

*UNLESS OTHERWISE SPECIFIED TOLERANCES PER DECIMAL PRECISION ARE: X=±1 (±0.039), X.X=±0.5 (±0.020), X.XX=±0.25 (±0.010), X.XXX=±0.127 (±0.005). LEAD SIZE=±0.05 (±0.002), LEAD LENGTH=±0.75 (±0.030). MIN= $^{+\text{DECIMAL PRECISION}}_{-0.00}$ MAX.= $^{+0.00}_{-\text{DECIMAL PRECISION}}$

425 N. GARY AVE.
CAROL STREAM, IL 60188
PHONE：800-278-5666
FAX：630-315-2150
WEB：WWW.LUMEX.COM

T-5MM LED, RIGHT ANGLE FAULT INDICATOR, 625nm RED/565nm GREEN BICOLOR LEDs, WHITE DIFFUSED LENS.

****THE SPECIFICATIONS MAY CHANGE AT ANY TIME WITHOUT NOTICE.****

CONFIDENTIAL INFORMATION

THE INFORMATION CONTAINED IN THIS DOCUMENT IS THE PROPERTY OF LUMEX INC. EXCEPT AS SPECIFICALLY AUTHORIZED IN WRITING BY LUMEX INC., THE HOLDER OF THIS DOCUMENT SHALL KEEP ALL INFORMATION CONTAINED HEREIN CONFIDENTIAL AND SHALL PROTECT SAME IN WHOLE OR IN PART FROM DISCLOSURE AND DISSEMINATION TO ALL THIRD PARTIES.

DATE： 2024..04.10	DRAWN BY：E.C.
PAGE： 1 OF 1	CHKD BY： T.S.
SCALE： NTF	APRVD BY： G.Y.
UNIT： mm [INCH]	Pb