SUB ASSEMBLY PART NO. AND CH. CODE	NO.	PART NO. AND CH. CODE	PART NAME	MATERIAL	COLOR	TREAT. & FIN.	QTY.
7388-2978-30	①	7288-2978-30	2.3Ⅱ 8P SEALED JOINT HOUSING BUSBAR PLATE	PBT	BLACK	———	1
	②	7117-5412-02	2.3Ⅱ 8P SEALED J/C BUSBAR	BRASS	——	TIN PLATING	1
	③	7137-2988-80	2.3Ⅱ 8P SEALED JOINT HOUSING PACKING	SILICONE RUBBER	BROWN	———	1

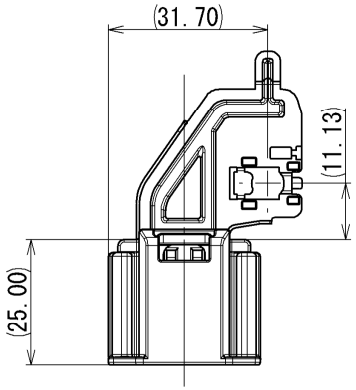

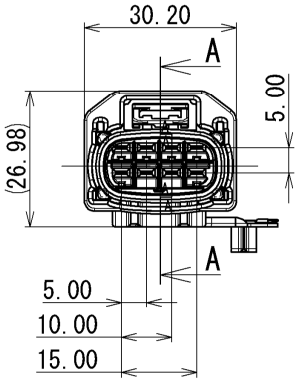

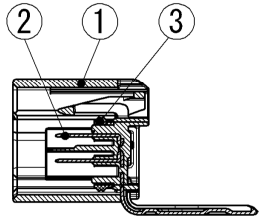

SEC. A-A

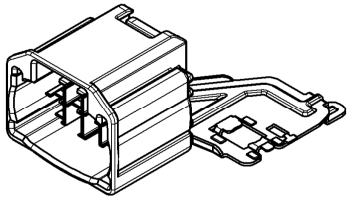

REFERENCE

SHAPE OF MATING HOLE
取付穴形状

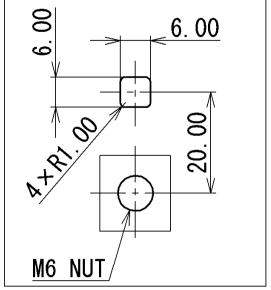

注記

1. 取扱説明書NO. YPES-15-1437

NOTE

1. HANDLING MANUAL NO. YPES-15-1437

GENERAL TOLERANCE											
	10 MAX	50 MAX	100 MAX	250 MAX	250 OVR	R5 MAX	R10 MAX	R20 MAX	R20 OVR	ANGLE	ECCENT
A	±0.15	±0.2	±0.3	±0.5	±0.75	±0.2	±0.3	±0.5	±2.5	±3°	0.1
B	±0.2	±0.3	±0.55	±0.95	±1.4					±3°	0.1
Ⓒ	±0.3	±0.5	±0.8	±1.4	±2					±3°	0.15

ISSUE MARK

LET	DATE	REVISION RECORD	NO.	CHKD
	2014/08/22	NEW	C14-Z490	M.M

GENERAL TOLERANCE							
	10MAX	50MAX	100MAX	250MAX	250OVR	ANGLE	ECCENT
A	±0.15	±0.2	±0.3	±0.5	±0.75	±30'	0.1
B	±0.2	±0.3	±0.55	±0.95	±1.4	±30'	0.1
C	±0.3	±0.5	±0.8	±1.4	±2	±30'	0.15

SPECIFIED

MASS

CUSTOMER

CUSTOMER PART NO. | CUSTOMER DWG NO.

OFFICE | TRIAL PART NO.

VENDOR

VENDOR NO.

DWG TYPE	DWG SOURCE	DWG DATE	UNIT	SCL	ANGLE
R	NEW	2014/08/22	mm	1:1	3

APPROVED	CHECKED	CHECKED	DESIGN	DRAWN
S. SUZUKI	H. KANDA	M. SAITOH	M. SAITOH	M. MIGUEL
2014/08/22	2014/08/22	2014/08/22	2014/05/26	2014/08/22

MATL. SPEC. SEE TABLE | TREAT. & FIN. SEE TABLE

NAME 2.3Ⅱ 8P SEALED JOINT HOUSING MALE SUB ASSEMBLY

PART NO. CH. CODE 7388-2978-30

DWG NO. 7388-2978-30:R | SET DWG NO.

YAZAKI CORPORATION