△1 GENERAL TOLERANCE											
	10 MAX	50 MAX	100 MAX	250 MAX	250 OVR	R5 MAX	R10 MAX	R20 MAX	R20 OVR	ANGLE	ECCENT
A	±0.15	±0.2	±0.3	±0.5	±0.75	±0.2	±0.3	±0.5	±2.5	±3°	0.1
B	±0.2	±0.3	±0.55	±0.95	±1.4					±3°	0.1
Ⓒ	±0.3	±0.5	±0.8	±1.4	±2					±3°	0.15

ASSEMBLY PART NO. AND CH. CODE	NO.	PART NO. AND CH. CODE	PART NAME	MATERIAL	COLOR	QTY.
△1 7327-6122, A	①	7227-6122	△1 HIGH CURRENT FUSE LINKS (大電流ヒューズ) A3-TYPE FUSE ELEMENT SUB ASSEMBLY 60A	△1 ——	——	1
	②	7123-3923-70	△1 HIGH CURRENT FUSE LINKS (大電流ヒューズ) A3-TYPE HOUSING 60A	PA6T-G	YELLOW	1
	③	7157-8059	△1 HIGH CURRENT FUSE LINKS (大電流ヒューズ) COVER 60A	PES	——	1

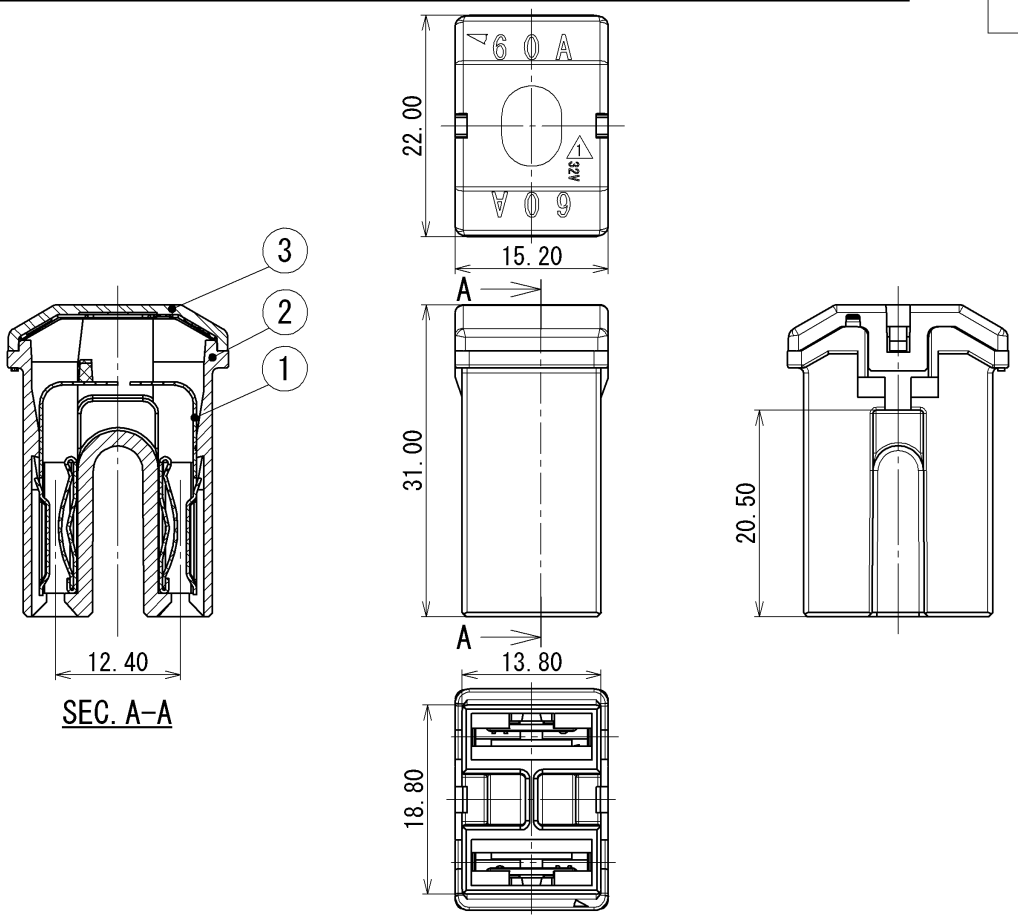

注記

1. 相手嵌合端子は、9.5オス端子とする。

NOTE

1. MATING PAIR OF TERMINAL : 9.5 TERMINAL MALE.

ISSUE MARK

LET	DATE	REVISION RECORD	NO.	CHKD
△1	2013/05/16	ADDITION OF RATED VOLTAGE ETC., A	C13-Z189	M.C
	1998/01/08	NEW	C98-L095	G.N

GENERAL TOLERANCE							
	10MAX	50MAX	100MAX	250MAX	250OVR	ANGLE	ECCENT
A	±0.15	±0.2	±0.3	±0.5	±0.75	±30'	0.1
B	±0.2	±0.3	±0.55	±0.95	±1.4	±30'	0.1
C	±0.3	±0.5	±0.8	±1.4	±2	±30'	0.15

SPECIFIED | MASS

CUSTOMER					
CUSTOMER PART NO.		CUSTOMER DWG NO.			
OFFICE		TRIAL PART NO.			
VENDOR					
VENDOR NO.					
DWG TYPE	DWG SOURCE	DWG DATE	UNIT	SCL	ANGLE
R	NEW	1998/01/08	mm	2:1	3
APPROVED	CHECKED	CHECKED	DESIGN	DRAWN	
S. ONODA			H. HANAZAKI	M. CABO	
2013/05/16			1994/02/14	2013/05/16	

MATL. SPEC. SEE TABLE | TREAT. & FIN.

NAME HIGH CURRENT FUSE LINKS (大電流ヒューズ) A3-TYPE 60A

PART NO. CH. CODE △1 7327-6122, A

DWG NO. 7327-6122:R | SET DWG NO.

YAZAKI CORPORATION