ASSEMBLY NO. AND CH. CODE	NO.	PART NAME	QTY.	MATERIAL	COLOR
7327-6114, A	1	COVER	1	PES	————
	2	HOUSING	1	POLYAMIDE	LIGHT BLUE
	3	FUSE ELEMENT FOR 20A	1	COPPER ALLOY	————

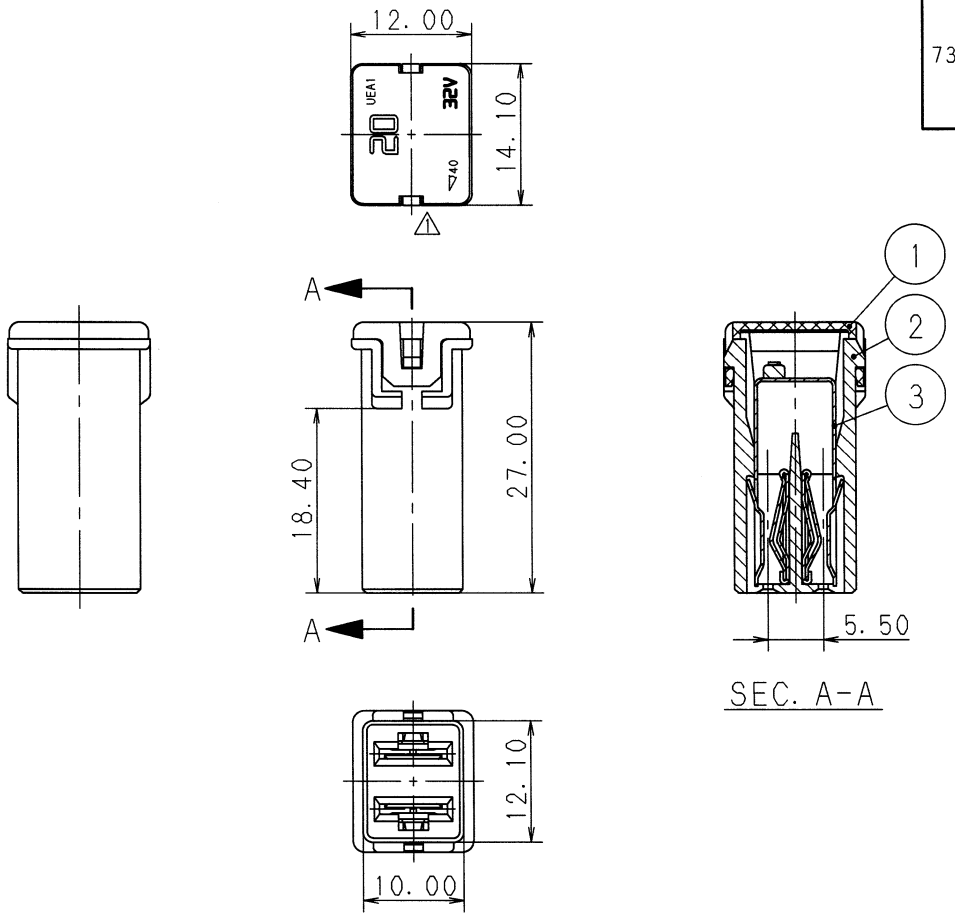

注記

1. 相手嵌合端子は、250 オス端子とする.

NOTE

1. MATING PAIR OF TERMINAL : 250 TERMINAL MALE

⚠ LASER MARK SPECIFIED POSITION
レーザーマーカー指定位置

	INDCATION PATTERN	20A
COVER INDICATION カバー表示	PATTERN 1 パターン1	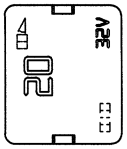
	PATTERN 2 パターン2	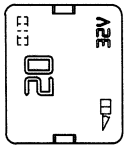

ISSUE MARK

LET	DATE	REVISION RECORD	NO.	CHKD
⚠	00. 11. 21	CHANGED FORM ETC. A	C00-M352	S. O
	95. 07. 20	NEW	C95-M224	M. T

GENERAL TOLERANCE

	10MAX	50MAX	100MAX	250MAX	2500VR	ANGLE	ECCENT
A	±0. 15	±0. 2	±0. 3	±0. 5	±0. 75	±30′	0. 1
B	±0. 2	±0. 3	±0. 55	±0. 95	±1. 4	±30′	0. 1
C	±0. 3	±0. 5	±0. 8	±1. 4	±2	±30′	0. 15

SPECIFIED

MASS g

CUSTOMER	
CUSTOMER PART NO.	CUSTOMER DWG NO.
OFFICE	TRIAL PART NO.
VENDOR	7V9427-7627
VENDOR NO.	

DWG TYPE	DWG SOURCE	DWG DATE	UNIT	SCL	ANGLE
R	NEW	95. 07. 20	mm	2/1	3

APPROVED	CHECKED	CHECKED	DESIGN	DRAWN
木村	阿部	[illegible]	T. KUDOH	ISHIJIMA
00. 11. 23	00. 11. 22	00. 11. 22	94. 06. 08	00. 11. 21

MATL. SPEC. SEE TABLE

TREAT. & FIN.

NAME HIGH CURRENT FUSE LINKS
(大電流ヒューズ) A_1-TYPE 20A

PART NO. / CH. CODE 7327-6114, A

DWG NO. 7327-6114 : R

SET DWG NO.

YAZAKI CORPORATION