| GENERAL TOLERANCE | | | | | | | |
|---|---|---|---|---|---|---|---|
| | 10MAX | 50MAX | 100MAX | 250MAX | 2500VR | ANGLE | ECCENT |
| TOLERANCE | ±0.5 | ±0.8 | ±1.5 | ±2.5 | ±3.0 | ±5° | 0.3 |

| NO. | PART NO. | PART NAME | MATERIAL | FINISHING | REMARKS |
|---|---|---|---|---|---|
| ① | 7106-3457 | BATTERY TERMINAL BASE STUD N+ | COPPER ALLOY(t=1.6) | PLAT-Sn | ——— |
| ② | 7150-1085 | SQUARE BOLT | SWRCH | PLAT-Sn | M6 |
| ③ | 7151-1063 | NUT | SWRCH | PLAT-Sn | M6 |
| ④ | 7150-1202 | BOLT | SWRCH | PLAT-Sn | M8:P=1.25 |

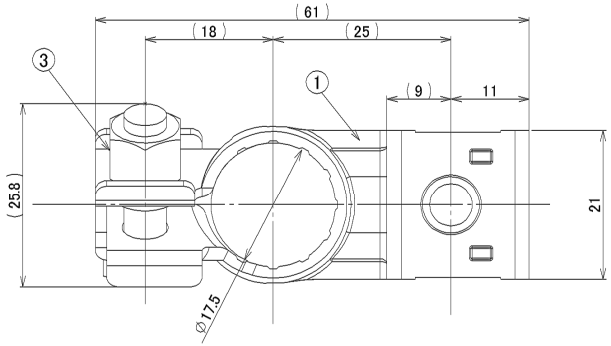


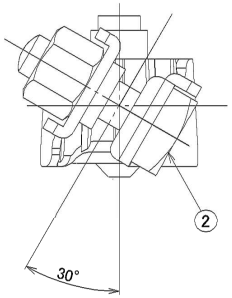


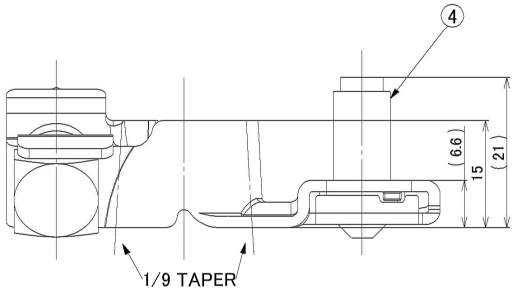


注 記
1. 適用電線サイズ:MAX 30sq
2. ④ スタッドボルトへナット締め付けトルク:11～13N·m
3. ②・③ 適性締め付けトルク:5～7N·m

NOTES
1. APPLICABLE WIRE SIZE: MAX 30sq
2. ④ STUD BOLT TIGHTING TORQUE : 11～13N·m
3. ②・③ TIGHTING TORQUE : 5～7N·m

| LET | DATE | REVISION RECORD | NO. | CHKD |
|---|---|---|---|---|
| | 06.02.08 | NEW | C06-0039 | T.N |

| GENERAL TOLERANCE | | | | | | | |
|---|---|---|---|---|---|---|---|
| | TOMAX | 50MAX | 100MAX | 250MAX | 2500VR | ANGLE | ECCENT |
| A | ±0.15 | ±0.2 | ±0.3 | ±0.5 | ±0.75 | ±30' | 0.1 |
| B | ±0.2 | ±0.3 | ±0.55 | ±0.95 | ±1.4 | ±30' | 0.1 |
| C | ±0.3 | ±0.5 | ±0.8 | ±1.4 | ±2.0 | ±30' | 0.15 |
| SPECIFIED | SEE TABLE | | | | | MASS | APPROX. 50 g |

| | | | | | |
|---|---|---|---|---|---|
| CUSTOMER | | | | | |
| CUSTOMER PART NO. | | CUSTOMER DWG NO. | | | |
| OFFICE | | TRIAL PART NO. | | | |
| VENDOR | | | | | |
| VENDOR NO. | | | | | |
| DWG TYPE | DWG SOURCE | DWG DATE | UNIT | SCL | ANGLE |
| R | NEW | 06.02.08 | mm | 2:1 | 3 |
| APPROVED | CHECKED | CHECKED | DESIGN | DRAWN | |
| K.KIMURA | Y.SUZUKI | S.UEMATSU | G.FUJII | T.NAGASAWA | |
| | | | 05.01.17 | 06.02.08 | |

| | | | |
|---|---|---|---|
| MATL. SPEC. | SEE TABLE | TREAT. & FIN. | SEE TABLE |
| NAME | BATTERY TERMINAL ASSY STUD N+ | | |
| PART NO. CH. CODE | 7306-3457-02 | | |
| DWG NO. | 7306-3457-02:R | SET DWG NO. | |
| | YAZAKI CORPORATION | | |

ISSUE MARK

2006年2月7日 19:41:48