SUB-ASSEMBLY PART NUMBER	NO.	PART NUMBER	PART NAME	MATERIAL	COLOR	QUANTITY
7298-4051-30	1	7198-4051-30	6P 040-III (1.00mm) UNSEALED FEMALE CONNECTOR HOUSING	PBT-GF15	BLACK	1
	2	7172-1766	6P 040-III (1.00mm) UNSEALED FEMALE CONNECTOR ISL	PBT-GF15	NATURAL	1

(5/1)

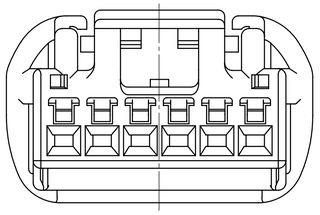

7298-4051-30
KEYWAY A

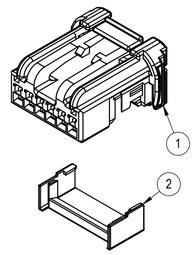

EXPLODED VIEW
(2/1)

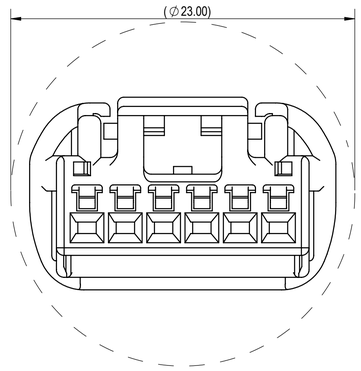

RECOMMENDED PASS-THROUGH
HOLE DIMENSION
(1mm CLEARANCE ALL AROUND)
(5/1)

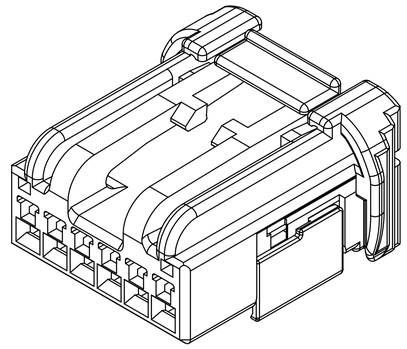

FRONT ISOMETRIC VIEW
(5/1)

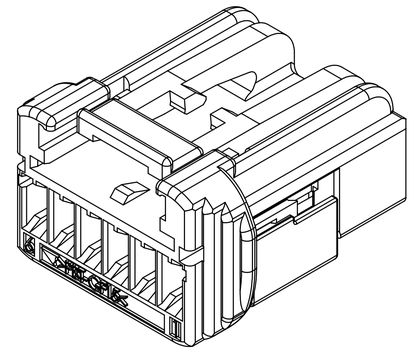

REAR ISOMETRIC VIEW
(5/1)

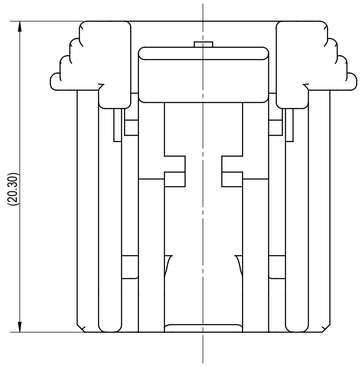

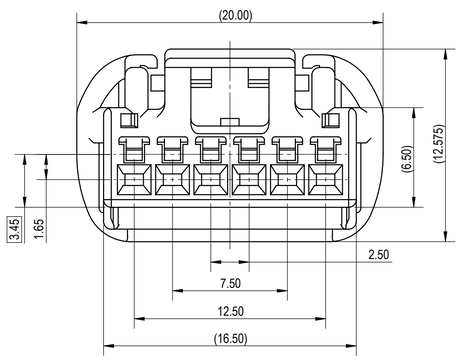

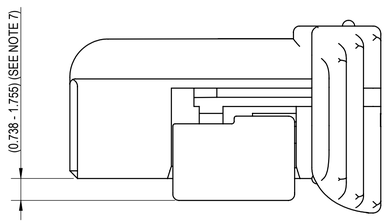

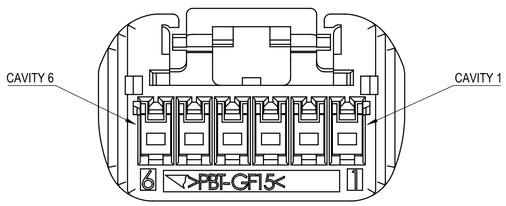

NOTES:

1. PARTS MUST BE PURCHASED FROM YAZAKI.
2. PARTS MUST BE FREE OF FLASH AND IMPERFECTIONS THAT AFFECT FUNCTION.
3. APPLICABLE TERMINAL: SEE 7116-4231-02:R DRAWING (1.00 040-III UNSEALED).
   MAX WIRE OD: 1.60mm
4. MATING PART NUMBER: SEE 7298-4051-30:A
5. PART SATISFIES PF.90012, REV. B, APRIL 2017 (T2/V1/S1/MF2)
6. PART TO COMPLY WITH YPES-31-038 REQUIREMENTS.
7. THIS DIMENSION SHOWS THE PRE-SET POSITION OF THE ISL.
8. THIS DRAWING IS TO BE USED FOR INTERNAL YAZAKI PSW SUBMISSION.
9. HANDLING MANUAL NUMBER: YPES-15-278

LET	DATE	REVISION RECORD	NO.	CHKD
-	10-05-2020	NEW	C20-A717	AG

GENERAL TOLERANCE

	10MAX	50MAX	100MAX	250MAX	250OVR	R5 MAX	R10 MAX	R20 MAX	R20 OVR	ANGLE	ECCENT
A	±0.15	±0.20	±0.30	±0.50	±0.75	±0.20	±0.30	±0.50	±2.50	±3°	0.1
B	±0.20	±0.30	±0.55	±0.95	±1.40					±3°	0.1
Ⓒ	±0.30	±0.50	±0.80	±1.40	±2.00					±3°	0.15
SPECIFIED										MASS	(2.11) g

CUSTOMER						
CUSTOMER PART NO.		CUSTOMER DWG NO.				
OFFICE	YNA	TRIAL PART NO.				
VENDOR						
VENDOR NO.						
DWG TYPE	DWG SOURCE	DWG DATE	UNIT	SCL	ANGLE	
R	7298-4051-30:M △1	10-05-2020	mm	5/1	3	
APPROVED	CHECKED	CHECKED	DESIGN	DRAWN		
Jeremy Gagnon (Digitally signed by Jeremy Gagnon Date: 2020.05.12 16:23:19 -04'00')		Isabel Muñiz	DALE SIEVERT 04-25-2019	ANDRES GARCIA 10-07-2020		

MATL. SPEC. SEE TABLE | TREAT. & FIN. N/A

NAME 6P 040-III (1.00mm) UNSEALED FEMALE CONNECTOR SUB-ASSEMBLY

PART NO. / CH. CODE 7298-4051-30

DWG NO. 7298-4051-30:R

YAZAKI CORPORATION

ISSUE MARK