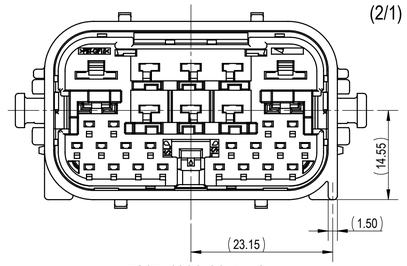

7297-4838-30, ETC.
KEYWAY A

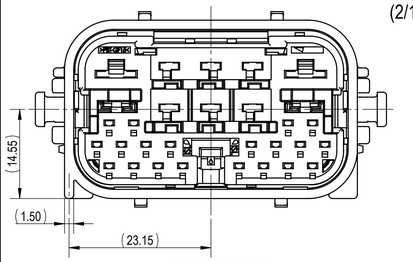

7297-4844-40
KEYWAY B

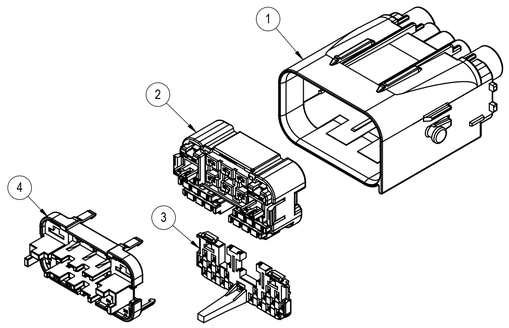

EXPLODED VIEW
(1/1)

TABLE 1	SUB-ASSEMBLY PART NUMBER	NO.	PART NUMBER	PART NAME	MATERIAL	COLOR	QUANTITY
	SEE TABLE 2	1	SEE TABLE 2	28P (2x6.3mm + 6x2.8mm + 20x1.2mm) SEALED MALE OUTER HOUSING	PBT-GF15	SEE TABLE 2	1
		2	7197-4815-30	28P (2x6.3mm + 6x2.8mm + 20x1.2mm) SEALED MALE INNER HOUSING	PBT-GF15	BLACK	1
		3	7172-1812	28P (2x6.3mm + 6x2.8mm + 20x1.2mm) SEALED MALE ISL	PBT-GF15	NATURAL	1
		4	7172-1813-60	28P (2x6.3mm + 6x2.8mm + 20x1.2mm) SEALED MALE MBS	PBT-GF15	GREEN	1

TABLE 2

	SUB-ASSEMBLY PART NUMBER	HOUSING PART NUMBER	YAZAKI INLINE MATING PART NUMBER	KEYWAY	COLOR	X = BLOCKED CAVITY																										
						6.3	2.8			6.3	2.8			1.2																		
						1	2	3	4	5	6	7	8	9	10	11	12	13	14	15	16	17	18	19	20	21	22	23	24	25	26	27	28
	7297-4838-30	7197-4838-30	7298-4826-30	A	BLACK																											
	7297-4844-40	7197-4844-40	7298-4832-40	B	LIGHT GRAY																											
1	7297-4838-70	7197-4838-70	7298-4826-70	A	YELLOW																											
1	7297-9243-70	7197-9243-70	7298-9244-70	A	YELLOW		X	X	X		X	X	X						X					X									

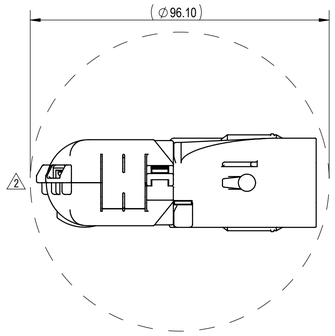

RECOMMENDED PASS-THROUGH
HOLE DIMENSION WITH 7174-2876-30
OR 7174-2750-30 (1mm CLEARANCE ALL AROUND)
(1/1)

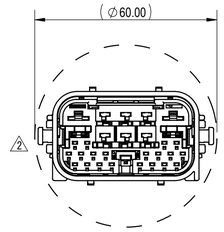

RECOMMENDED PASS-THROUGH
HOLE DIMENSION WITH 7174-2721-30 OR WITHOUT COVER
(1mm CLEARANCE ALL AROUND)
(1/1)

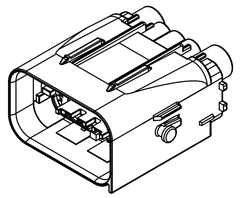

FRONT ISOMETRIC VIEW
(1/1)

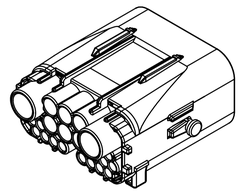

REAR ISOMETRIC VIEW
(1/1)

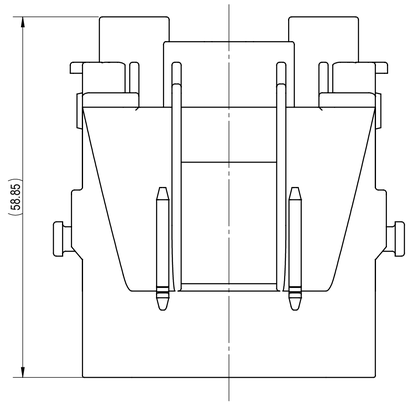

NOTES:

1. PARTS MUST BE PURCHASED FROM YAZAKI.
2. PARTS MUST BE FREE OF FLASH AND IMPERFECTIONS THAT AFFECT FUNCTION.
3. APPLICABLE TERMINAL: SEE 10322345-1 (KOSTAL 1.2 MLK TANG) (CAVITIES 9-28)
   MAX WIRE OD: 2.10mm
   MIN WIRE OD: 1.20mm
   SEE 7114-4150-02:R DRAWING (YAZAKI 2.8 YESC)(CAVITIES 2-4, 6-8)
   MAX WIRE OD: 3.40mm
   MIN WIRE OD: 1.20mm
   SEE 7114-4140-02:R DRAWING (YAZAKI 6.3 YESC) (CAVITIES 1,5)
   MAX WIRE OD: 4.30mm
   MIN WIRE OD: 1.40mm
4. APPLICABLE WIRE SEAL:
   1.2mm (CAVITIES 9-28): SEE 7172-5568-70:R DRAWING (YAZAKI 1.2 YMT) (Ø3.55mm CAVITY SIZE)
   SEE 10129550 DRAWING (KOSTAL 1.2 MLK) (Ø3.55mm CAVITY SIZE)
   2.8mm (CAVITIES 2-4, 6-8): SEE 7158-3111-60:R DRAWING (YAZAKI 2.8mm YESC)
   6.3mm (CAVITIES 1,5): SEE 7158-3081-50:R DRAWING (YAZAKI 6.3mm YESC)
   SEE 7158-3084-40:RA DRAWING (YAZAKI 6.3mm YESC)
5. APPLICABLE CAVITY PLUG:
   1.2mm (CAVITIES 9-28): SEE 7172-5572-90:R DRAWING (YAZAKI YMT, Ø3.55mm CAVITY SIZE)
   SEE10129550 DRAWING (KOSTAL MLK, Ø3.55mm CAVITY SIZE)
   2.8mm (CAVITIES 2-4, 6-8): SEE 7158-3114-90:R DRAWING (YAZAKI YESC)
   6.3mm (CAVITIES 1,5): SEE 7158-3080-60:R DRAWING (YAZAKI YESC)
6. MATING PART NUMBER: SEE TABLE 2
7. PART SATISFIES PF.90012, REV. C, 17 APRIL 2020, (T3/V2/S3/MF3)
8. PART TO COMPLY WITH YPES-31-038 REQUIREMENTS.
9. THIS DIMENSION SHOWS THE PRE-SET POSITION OF THE ISL.
10. THIS DIMENSION SHOWS THE PRE-SET POSITION OF THE MBS.
11. THIS DRAWING IS TO BE USED FOR INTERNAL YAZAKI PSW SUBMISSION.
12. HANDLING MANUAL NUMBER: YPES-15-1844
13. APPLICABLE WIRE COVER PART NUMBER:
    180° WIRE COVER: 7174-2721-30
    90° WIRE COVER: 7174-2750-30
    2 90° SHORT WIRE COVER: 7174-2876-30

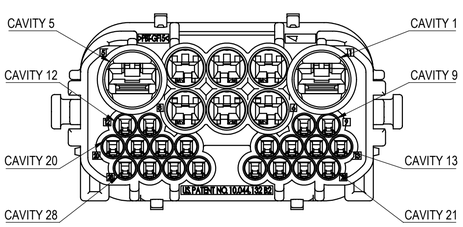

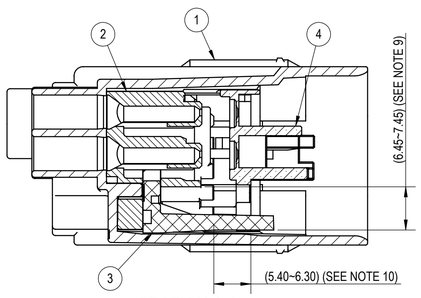

SECTION A-A

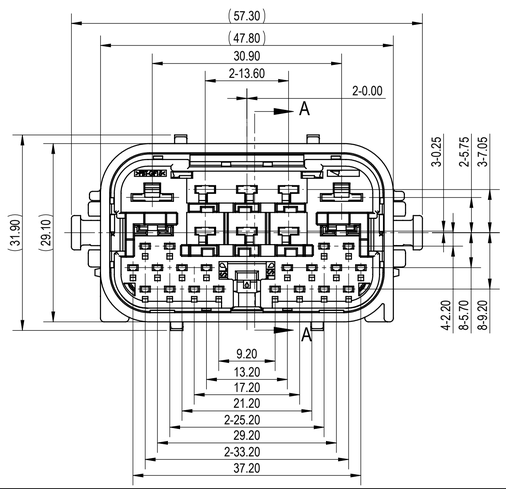

LET	DATE	REVISION RECORD	NO.	CHKD
2	04-03-2023	ADDED APPLICABLE WIRE COVER AND ADDED PASS THROUGH VIEWS	C23-A207	I.B
1	07-14-2022	ADDED PART NUMBERS	C22-A366	A.C.
-	11-24-2021	NEW	C21-A846	M.S.

GENERAL TOLERANCE

	10MAX	50MAX	100MAX	250MAX	250OVR	R5 MAX	R10 MAX	R20 MAX	R20 OVR	ANGLE	ECCENT
A	±0.15	±0.20	±0.30	±0.50	±0.75	±0.20	±0.30	±0.50	±2.50	±3°	0.1
B	±0.20	±0.30	±0.55	±0.95	±1.40					±3°	0.1
C	±0.30	±0.50	±0.80	±1.40	±2.00					±3°	0.15
SPECIFIED										MASS	(38.2) g

CUSTOMER			
CUSTOMER PART NO.		CUSTOMER DWG NO.	
OFFICE	YNA	TRIAL PART NO.	
VENDOR			
VENDOR NO.			

DWG TYPE	DWG SOURCE	DWG DATE	UNIT	SCL	ANGLE
R	7297-4838-30:M 2	11-24-2021	mm	2/1	3

APPROVED	CHECKED	CHECKED	DESIGN	DRAWN
		Isabel Muñiz	ESTHER CRESWELL	ISABEL BACA
			09-23-2019	04-13-2023

MATL. SPEC. SEE TABLE | TREAT. & FIN. N/A

NAME 28P (2Px6.3mm + 6Px2.8mm + 20Px1.2mm) SEALED MALE CONNECTOR SUB-ASSEMBLY

PART NO. / CH. CODE 7297-4838-30, ETC.

DWG NO. 7297-4838-30:R

YAZAKI CORPORATION

ISSUE MARK