SUB ASSEMBLY PART NO. AND CH. CODE	NO.	PART NO. AND CH. CODE	PART NAME	MATERIAL	COLOR	QTY.
△1 7289-6547(7C89-6547)	①	△1 7189-6547 (7B89-6547)	0.64Ⅱ 12P CAN J/C HOUSING FEMALE	PBT	NATURAL	1
	②	△1 7172-1295 (7B72-1295)	0.64Ⅱ 12P CAN J/C SPACER FEMALE	PBT	NATURAL	1

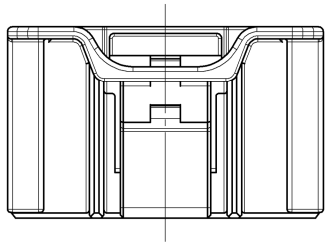

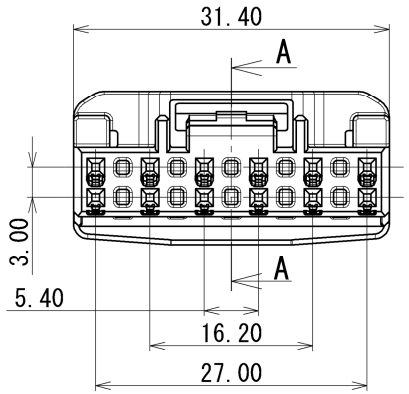

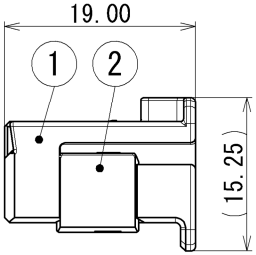

注記

1. 取扱説明書No. YPES-15-998

△1 2. ( )内の品番はA/B回路及び特別管理回路に使用すること。

NOTES

1. HANDLING MANUAL NO. YPES-15-998

△1 2. PART NUMBERS IN PARENTHESIS SHALL BE USED FOR AIR BAG(A/B) CIRCUITS AND OTHER CIRCUITS DESIGNATED FOR SPECIAL MONITORING.

GENERAL TOLERANCE											
	10 MAX	50 MAX	100 MAX	250 MAX	250 OVR	R5 MAX	R10 MAX	R20 MAX	R20 OVR	ANGLE	ECCENT
A	±0.15	±0.2	±0.3	±0.5	±0.75	±0.2	±0.3	±0.5	±2.5	±3°	0.1
B	±0.2	±0.3	±0.55	±0.95	±1.4					±3°	0.1
Ⓒ	±0.3	±0.5	±0.8	±1.4	±2					±3°	0.15

ISSUE MARK

LET	DATE	REVISION RECORD	NO.	CHKD
△1	2016/07/19	ADDED A/B PART NO.ETC.	C16-P306	T.T
	2016/03/11	NEW	C16-Z266	A.Q

GENERAL TOLERANCE	10MAX	50MAX	100MAX	250MAX	2500VR	ANGLE	ECCENT
A	±0.15	±0.2	±0.3	±0.5	±0.75	±30'	0.1
B	±0.2	±0.3	±0.55	±0.95	±1.4	±30'	0.1
C	±0.3	±0.5	±0.8	±1.4	±2	±30'	0.15

SPECIFIED

MASS

CUSTOMER

CUSTOMER PART NO. | CUSTOMER DWG NO.

OFFICE | TRIAL PART NO.

VENDOR

VENDOR NO.

DWG TYPE	DWG SOURCE	DWG DATE	UNIT	SCL	ANGLE
R	NEW	2016/03/11	mm	2:1	3

APPROVED	CHECKED	CHECKED	DESIGN	DRAWN
S.SUZUKI	N.SAKAMOTO	———	N.SAKAMOTO	T.TORINOUMI
2016/07/19	2016/07/19	———	2015/12/07	2016/07/19

MATL. SPEC. SEE TABLE | TREAT. & FIN.

NAME 0.64Ⅱ 12P CAN J/C HOUSING FEMALE SUB ASSEMBLY

PART NO. CH. CODE △1 7289-6547(7C89-6547)

DWG NO. 7289-6547:R | SET DWG NO.

YAZAKI CORPORATION