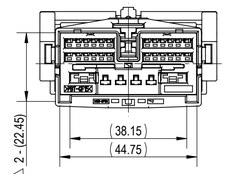

7288-3183-30, ETC.
KEYWAY A

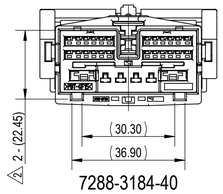

7288-3184-40
KEYWAY B

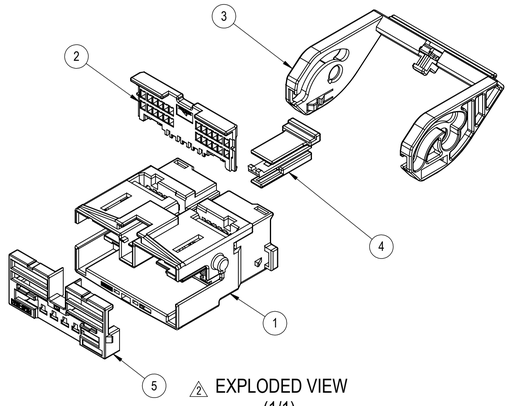

EXPLODED VIEW
(1/1)

TABLE 1	SUB-ASSEMBLY PART NUMBER	NO.	PART NUMBER	PART NAME	MATERIAL	COLOR	QUANTITY
	SEE TABLE 2	1	SEE TABLE 2	30P (24P 1.2 + 4P 2.8 + 2P 6.3) UNSEALED MALE CONNECTOR HOUSING	PBT-GF15	SEE TABLE 2	1
		2	7172-0954	30P (24P 1.2 + 4P 2.8 + 2P 6.3) UNSEALED MALE CONNECTOR ISL	PBT-GF15	NATURAL	1
		3	7173-2774	30P (24P 1.2 + 4P 2.8 + 2P 6.3) UNSEALED MALE CONNECTOR LEVER	PBT-GF15	NATURAL	1
		4	7172-0955-50	30P (24P 1.2 + 4P 2.8 + 2P 6.3) UNSEALED MALE CONNECTOR CPA	PBT-GF15	RED	1
		5	7172-0956	30P (24P 1.2 + 4P 2.8 + 2P 6.3) UNSEALED MALE CONNECTOR BLADE PROTECTOR	PBT-GF15	NATURAL	1

TABLE 2	SUB-ASSEMBLY PART NUMBER	HOUSING PART NUMBER	CPA	KEYWAY	COLOR	MASS (g)	YAZAKI INLINE MATING PART NUMBER
	7288-3183-30	7188-3183-30	Y	A	BLACK	(36.3g)	7289-3185-30
	7288-3183-70	7188-3183-70	Y	A	YELLOW	(36.3g)	7289-3185-70
	7288-3184-40	7188-3184-40	Y	B	LIGHT GRAY	(36.3g)	7289-3186-40

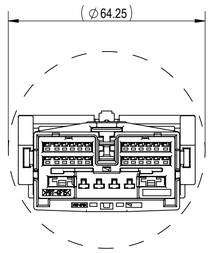

RECOMMENDED PASS-THROUGH
HOLE DIMENSION
(1mm CLEARANCE ALL AROUND)
(1/1)

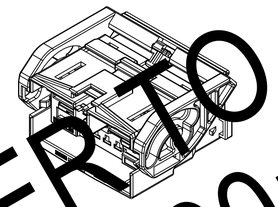

FRONT ISOMETRIC VIEW
(1/1)

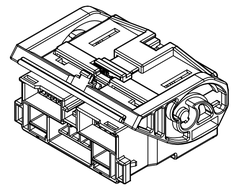

REAR ISOMETRIC VIEW
(1/1)

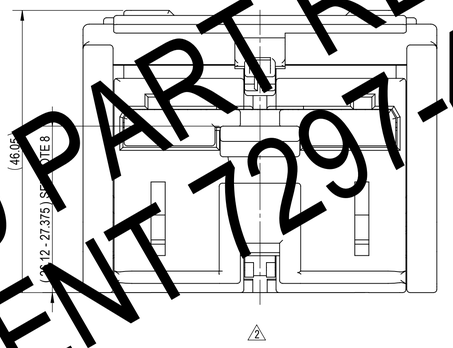

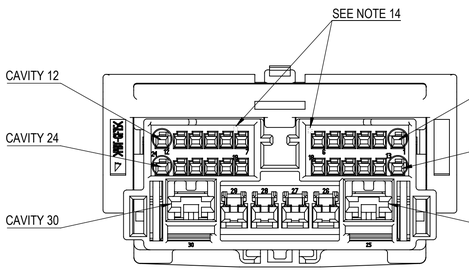

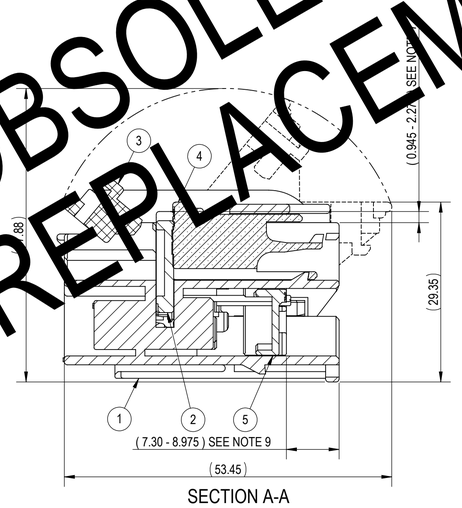

SECTION A-A

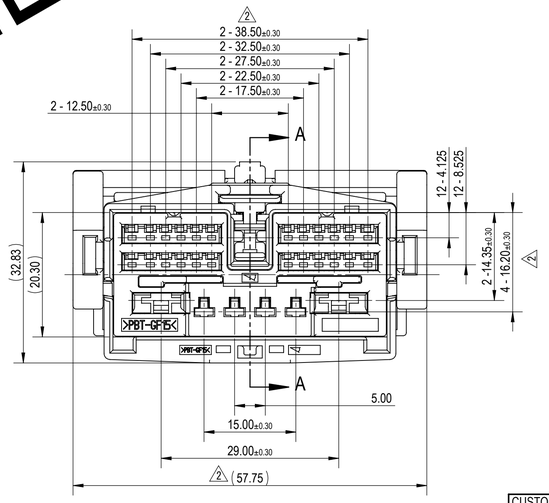

NOTES:
1. PARTS MUST BE PURCHASED FROM YAZAKI.
2. PARTS MUST BE FREE FROM FLASH AND IMPERFECTIONS THAT AFFECT FUNCTION.
3. APPLICABLE TERMINAL: SEE: C-1718398 DRAWING (TYCO 1.2mm MCON CB) OR 33101338 DRAWING (DELPHI 1.2 OCS).
   MAX WIRE OD: 2.40mm (CAVITIES 1, 12, 13, 24)
   MAX WIRE OD: 1.90mm (CAVITIES 2-11, 14-23)
   SEE: 7114-4110-02:R DRAWING (YESC 2.8mm)
   MAX WIRE OD: 3.00mm (CAVITIES 26-29)
   SEE: 7114-4120-02:R DRAWING (YESC 6.3mm)
   MAX WIRE OD: 4.90mm (CAVITIES 25, 30)
4. MATING PART NUMBER: SEE TABLE 2
5. PART SATISFIES USCAR-2 REVISION 6, FEBRUARY 2013 (T2/V1/S1/MF2).
6. PART TO COMPLY WITH YPES-31-038 REQUIREMENTS.
7. THIS DIMENSION SHOWS THE PRE-SET POSITION OF THE ISL.
8. THIS DIMENSION SHOWS THE PRE-SET POSITION OF THE CPA.
9. THIS DIMENSION SHOWS THE PRE-SET POSITION OF THE MBP.
10. THIS DRAWING IS TO BE USED FOR INTERNAL YAZAKI PSW SUBMISSION.
11. CLIP SLOT: BASED ON USCAR 11mm CLIP SLOT (EWCAP-005-11, REV. B)
12. HANDLING MANUAL NUMBER: YPES-15-1525E
13. CONNECTOR IS CAPABLE OF ACCEPTING A DRESS COVER.
14. THE LOCATION OF TERMINAL CAVITY NUMBERS 6 AND 7 CAN OPTIONALLY BE IN THE AREA SHOWN.

ISSUE MARK

LET	DATE	REVISION RECORD	NO.	CHKD
3	04-20-2021	ADDED REPLACEMENT NOTE	C21-A324	A.P.
2	10-05-2017	REMOVED JST TERMINAL	C17-AA57	D.Z.
1	04-02-2015	ADDED NOTE AND OPTIONAL LOCATION FOR TERMINAL CAVITY	C15-A272	M.L.
-	10-07-2014	NEW	C14-A251	G.M.

GENERAL TOLERANCE

	10MAX	50MAX	100MAX	250MAX	250OVR	R5 MAX	R10 MAX	R20 MAX	R20 OVR	ANGLE	ECCENT
A	±0.15	±0.2	±0.3	±0.5	±0.75	±0.2	±0.3	±0.5	±2.5	±3°	0.1
B	±0.2	±0.3	±0.55	±0.95	±1.4					±3°	0.1
C	±0.3	±0.5	±0.8	±1.4	±2					±3°	0.15

SPECIFIED

MASS SEE TABLE 2

CUSTOMER				MATL. SPEC.	SEE TABLE 1
CUSTOMER PART NO.		CUSTOMER DWG NO.		TREAT. & FIN.	N/A
OFFICE	YNA	TRIAL PART NO.		NAME	30P (24P 1.2 + 4P 2.8 + 2P 6.3) UNSEALED MALE CONNECTOR SUB-ASSEMBLY
VENDOR					
VENDOR NO.					

DWG TYPE	DWG SOURCE	DWG DATE	UNIT	SCL	ANGLE
R	7288-3183-30:M 0	10-07-2014	mm	2/1	3

APPROVED	CHECKED	CHECKED	DESIGN	DRAWN
		Isabel Muñiz	JUSTIN GERWATOWSKI	ADILENE PEREZ
			02-26-2014	05-26-2021

PART NO. / CH. CODE: 7288-3183-30, ETC.
DWG NO. 7288-3183-30:R
YAZAKI CORPORATION

OBSOLETED PART REFER TO
REPLACEMENT 7297-4331-30:R