TABLE 1

| SUB ASSEMBLY PART NO. AND CH. CODE | NO. | PART NO. AND CH. CODE | PART NAME | MATERIAL | COLOR | QTY. |
|---|---|---|---|---|---|---|
| △1 7287-1917 ETC. | ① | △1 SEE TABLE 2 | HOUSING | PBT | △1 SEE TABLE 2 | 1 |
| | ② | 7172-0231 | SPACER | PBT | NATURAL | 1 |

TABLE 2

| SUB ASSEMBLY PART NO. AND CH. CODE | PART NO. AND CH. CODE | COLOR |
|---|---|---|
| 7287-1917 | 7187-1917 | NATURAL |
| △1 7287-1917-30 | 7187-1917-30 | BLACK |
| △1 7287-1917-40 | 7187-1917-40 | LIGHT GRAY |
| △1 7287-1917-90 | 7187-1917-90 | BLUE |

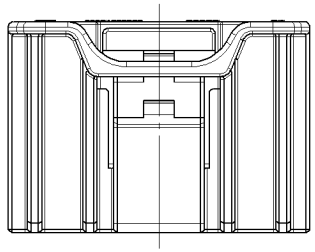

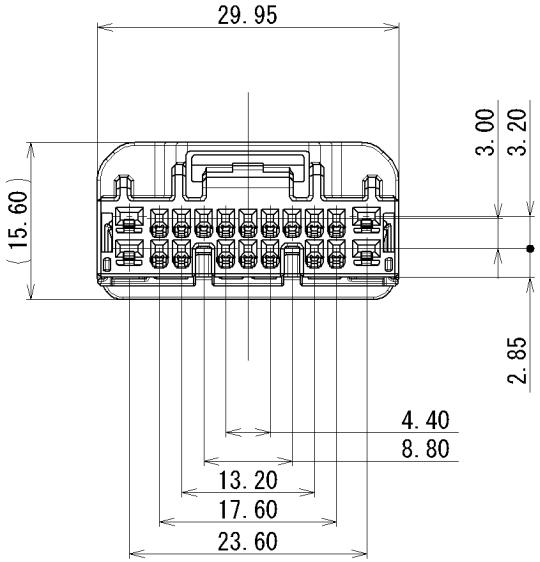


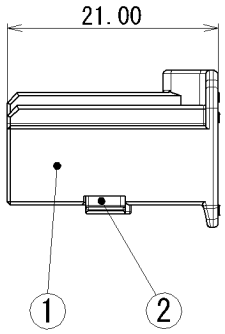


NOTES

△1 1. MATING PART NO. : 7286-1917 ETC.

△1 2. HANDLING MANUAL YPES-15-961

注記

△1 1. かん合相手品番 : 7286-1917 ETC.

△1 2. 取扱説明書NO.YPES-15-961

GENERAL TOLERANCE

| | 10 MAX | 50 MAX | 100 MAX | 250 MAX | 250 OVR | R5 MAX | R10 MAX | R20 MAX | R20 OVR | ANGLE | ECCENT |
|---|---|---|---|---|---|---|---|---|---|---|---|
| A | ±0.15 | ±0.2 | ±0.3 | ±0.5 | ±0.75 | ±0.2 | ±0.3 | ±0.5 | ±2.5 | ±3° | 0.1 |
| B | ±0.2 | ±0.3 | ±0.55 | ±0.95 | ±1.4 | | | | | ±3° | 0.1 |
| © | ±0.3 | ±0.5 | ±0.8 | ±1.4 | ±2 | | | | | ±3° | 0.15 |

ISSUE MARK

| LET | DATE | REVISION RECORD | NO. | CHKD |
|---|---|---|---|---|
| △1 | 2010/10/19 | ADDED COLOR PART NO., ETC. | C10-Z385 | R.U |
| | 2007/09/03 | NEW | C07-Z636 | T.M |

GENERAL TOLERANCE

| | 10MAX | 50MAX | 100MAX | 250MAX | 2500VR | ANGLE | ECCENT |
|---|---|---|---|---|---|---|---|
| A | ±0.15 | ±0.2 | ±0.3 | ±0.5 | ±0.75 | ±30' | 0.1 |
| B | ±0.2 | ±0.3 | ±0.55 | ±0.95 | ±1.4 | ±30' | 0.1 |
| C | ±0.3 | ±0.5 | ±0.8 | ±1.4 | ±2 | ±30' | 0.15 |

SPECIFIED

MASS g

CUSTOMER

CUSTOMER PART NO.

CUSTOMER DWG NO.

OFFICE

TRIAL PART NO.

VENDOR

VENDOR NO.

| DWG TYPE | DWG SOURCE | DWG DATE | UNIT | SCL | ANGLE |
|---|---|---|---|---|---|
| R | NEW | 2007/09/03 | mm | 2:1 | 3 |

| APPROVED | CHECKED | CHECKED | DESIGN | DRAWN |
|---|---|---|---|---|
| M.FUKUDA | S.KODAMA | R.UNO | T.MURO | C.YAO |
| 2010/10/19 | 2010/10/19 | 2010/10/19 | 2006/07/12 | 2010/10/19 |

MATL. SPEC. SEE TABLE

TREAT. & FIN.

NAME △1 0.64Ⅱ 16P + 1.5 4P HYBRID HOUSING

FEMALE SUB ASSEMBLY

PART NO. CH. CODE △1 7287-1917 ETC.

DWG NO. 7287-1917:R

SET DWG NO.

YAZAKI CORPORATION