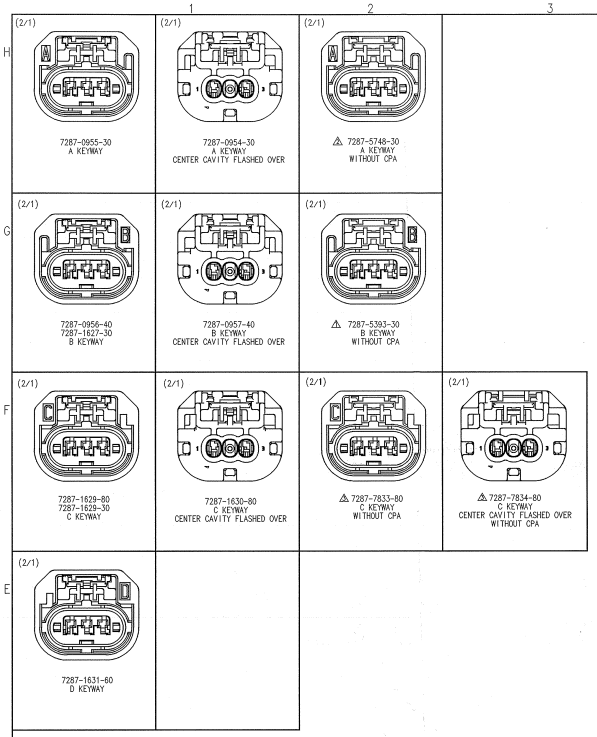

NOTES:

1. PARTS MUST BE PURCHASED FROM YAZAKI.
2. PARTS MUST BE FREE OF FLASH AND IMPERFECTIONS THAT AFFECT FUNCTION.
3. APPLICABLE TERMINAL: SEE 7116-4102-02:R DRAWING
4. APPLICABLE WIRE SEAL: SEE 7158-3374-90:R DRAWING
5. APPLICABLE CAVITY PLUG: SEE 7158-3037-70:R DRAWING
6. PART DESIGNED TO SATISFY USCAR-2, REVISION 4, MAY 2004, CLASS 3
7. PART DESIGNED TO MEET USCAR INTERFACE: 150-S-003-1-A02.
8. THIS DIMENSION SHOWS THE PRE-SET POSITION OF THE TPA.
9. THIS DIMENSION SHOWS THE PRE-SET POSITION OF THE CPA.
10. THIS DRAWING IS TO BE USED FOR INTERNAL YAZAKI PSW SUBMISSION.
11. PART TO COMPLY WITH YPES-31-038 REQUIREMENTS.

SUB ASSEMBLY PART NUMBER	NO.	PART NUMBER	PART NAME	MATERIAL	COLOR	QUANTITY
7287-0954-30	1	7187-1626-30	3P YESC 1.5mm REDUCED PITCH SEALED FEMALE HOUSING (TOP LOCK - A KEYWAY) CENTER CAVITY FLASHED OVER	PBT + GF	BLACK	1
	2	7172-0095	3P YESC 1.5mm REDUCED PITCH SEALED FEMALE TPA	PBT + GF	NATURAL	1
	3	7137-2829-50	3P YESC 1.5mm REDUCED PITCH SEALED FEMALE INTERFACE SEAL	SILICONE RUBBER	RED	1
	4	7173-0225-50	3P YESC 1.5mm REDUCED PITCH SEALED FEMALE CPA	PBT + GF	RED	1
7287-0955-30	1	7187-0950-30	3P YESC 1.5mm REDUCED PITCH SEALED FEMALE HOUSING (TOP LOCK - A KEYWAY)	PBT + GF	BLACK	1
	2	7172-0095	3P YESC 1.5mm REDUCED PITCH SEALED FEMALE TPA	PBT + GF	NATURAL	1
	3	7137-2829-50	3P YESC 1.5mm REDUCED PITCH SEALED FEMALE INTERFACE SEAL	SILICONE RUBBER	RED	1
	4	7173-0225-50	3P YESC 1.5mm REDUCED PITCH SEALED FEMALE CPA	PBT + GF	RED	1
7287-0956-40	1	7187-0951-40	3P YESC 1.5mm REDUCED PITCH SEALED FEMALE HOUSING (TOP LOCK - B KEYWAY)	PBT + GF	LIGHT GRAY	1
	2	7172-0095	3P YESC 1.5mm REDUCED PITCH SEALED FEMALE TPA	PBT + GF	NATURAL	1
	3	7137-2829-50	3P YESC 1.5mm REDUCED PITCH SEALED FEMALE INTERFACE SEAL	SILICONE RUBBER	RED	1
	4	7173-0225-50	3P YESC 1.5mm REDUCED PITCH SEALED FEMALE CPA	PBT + GF	RED	1
7287-0957-40	1	7187-1628-40	3P YESC 1.5mm REDUCED PITCH SEALED FEMALE HOUSING (TOP LOCK - B KEYWAY) CENTER CAVITY FLASHED OVER	PBT + GF	LIGHT GRAY	1
	2	7172-0095	3P YESC 1.5mm REDUCED PITCH SEALED FEMALE TPA	PBT + GF	NATURAL	1
	3	7137-2829-50	3P YESC 1.5mm REDUCED PITCH SEALED FEMALE INTERFACE SEAL	SILICONE RUBBER	RED	1
	4	7173-0225-50	3P YESC 1.5mm REDUCED PITCH SEALED FEMALE CPA	PBT + GF	RED	1
7287-1627-30	1	7187-1627-30	3P YESC 1.5mm REDUCED PITCH SEALED FEMALE HOUSING (TOP LOCK - B KEYWAY)	PBT + GF	BLACK	1
	2	7172-0095	3P YESC 1.5mm REDUCED PITCH SEALED FEMALE TPA	PBT + GF	NATURAL	1
	3	7137-2829-50	3P YESC 1.5mm REDUCED PITCH SEALED FEMALE INTERFACE SEAL	SILICONE RUBBER	RED	1
	4	7173-0225-50	3P YESC 1.5mm REDUCED PITCH SEALED FEMALE CPA	PBT + GF	RED	1
7287-1629-80	1	7187-1629-80	3P YESC 1.5mm REDUCED PITCH SEALED FEMALE HOUSING (TOP LOCK - C KEYWAY)	PBT + GF	BROWN	1
	2	7172-0095	3P YESC 1.5mm REDUCED PITCH SEALED FEMALE TPA	PBT + GF	NATURAL	1
	3	7137-2829-50	3P YESC 1.5mm REDUCED PITCH SEALED FEMALE INTERFACE SEAL	SILICONE RUBBER	RED	1
	4	7173-0225-50	3P YESC 1.5mm REDUCED PITCH SEALED FEMALE CPA	PBT + GF	RED	1
7287-1630-80	1	7187-1630-80	3P YESC 1.5mm REDUCED PITCH SEALED FEMALE HOUSING (TOP LOCK - C KEYWAY) CENTER CAVITY FLASHED OVER	PBT + GF	BROWN	1
	2	7172-0095	3P YESC 1.5mm REDUCED PITCH SEALED FEMALE TPA	PBT + GF	NATURAL	1
	3	7137-2829-50	3P YESC 1.5mm REDUCED PITCH SEALED FEMALE INTERFACE SEAL	SILICONE RUBBER	RED	1
	4	7173-0225-50	3P YESC 1.5mm REDUCED PITCH SEALED FEMALE CPA	PBT + GF	RED	1
7287-1629-30	1	7187-1629-30	3P YESC 1.5mm REDUCED PITCH SEALED FEMALE HOUSING (TOP LOCK - C KEYWAY)	PBT + GF	BLACK	1
	2	7172-0095	3P YESC 1.5mm REDUCED PITCH SEALED FEMALE TPA	PBT + GF	NATURAL	1
	3	7137-2829-50	3P YESC 1.5mm REDUCED PITCH SEALED FEMALE INTERFACE SEAL	SILICONE RUBBER	RED	1
	4	7173-0225-50	3P YESC 1.5mm REDUCED PITCH SEALED FEMALE CPA	PBT + GF	RED	1
7287-1631-60	1	7187-1631-60	3P YESC 1.5mm REDUCED PITCH SEALED FEMALE HOUSING (TOP LOCK - D KEYWAY)	PBT + GF	GREEN	1
	2	7172-0095	3P YESC 1.5mm REDUCED PITCH SEALED FEMALE TPA	PBT + GF	NATURAL	1
	3	7137-2829-50	3P YESC 1.5mm REDUCED PITCH SEALED FEMALE INTERFACE SEAL	SILICONE RUBBER	RED	1
	4	7173-0225-50	3P YESC 1.5mm REDUCED PITCH SEALED FEMALE CPA	PBT + GF	RED	1
⚠ 7287-5393-30	1	7187-1627-30	3P YESC 1.5mm REDUCED PITCH SEALED FEMALE HOUSING (TOP LOCK - B KEYWAY)	PBT + GF	BLACK	1
	2	7172-0095	3P YESC 1.5mm REDUCED PITCH SEALED FEMALE TPA	PBT + GF	NATURAL	1
	3	7137-2829-50	3P YESC 1.5mm REDUCED PITCH SEALED FEMALE INTERFACE SEAL	SILICONE RUBBER	RED	1
⚠ 7287-5748-30	1	7187-0950-30	3P YESC 1.5mm REDUCED PITCH SEALED FEMALE HOUSING (TOP LOCK - A KEYWAY)	PBT + GF	BLACK	1
	2	7172-0095	3P YESC 1.5mm REDUCED PITCH SEALED FEMALE TPA	PBT + GF	NATURAL	1
	3	7137-2829-50	3P YESC 1.5mm REDUCED PITCH SEALED FEMALE INTERFACE SEAL	SILICONE RUBBER	RED	1
⚠ 7287-7833-80	1	⚠ 7187-1629-80	3P YESC 1.5mm REDUCED PITCH SEALED FEMALE HOUSING (TOP LOCK - C KEYWAY)	PBT + GF	BROWN	1
	2	7172-0095	3P YESC 1.5mm REDUCED PITCH SEALED FEMALE TPA	PBT + GF	NATURAL	1
	3	7137-2829-50	3P YESC 1.5mm REDUCED PITCH SEALED FEMALE INTERFACE SEAL	SILICONE RUBBER	RED	1
⚠ 7287-7834-80	1	7187-1630-80	3P YESC 1.5mm REDUCED PITCH SEALED FEMALE HOUSING (TOP LOCK - C KEYWAY) CENTER CAVITY FLASHED OVER	PBT + GF	BROWN	1
	2	7172-0095	3P YESC 1.5mm REDUCED PITCH SEALED FEMALE TPA	PBT + GF	NATURAL	1
	3	7137-2829-50	3P YESC 1.5mm REDUCED PITCH SEALED FEMALE INTERFACE SEAL	SILICONE RUBBER	RED	1

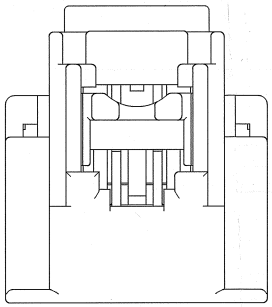

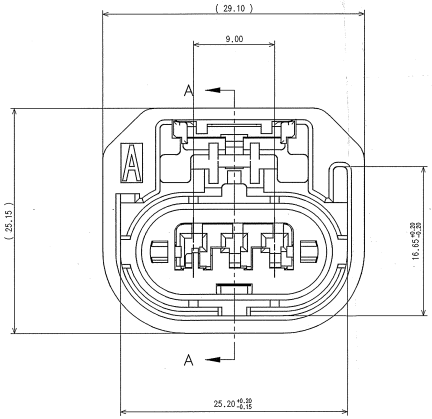

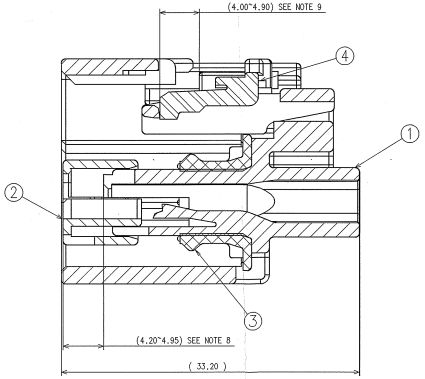

SECTION A-A

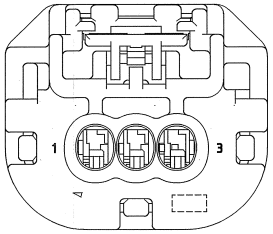

⚠	02.04.11	CORRECT PART NUMBER	C11-A116	S.S.
⚠	11.30.10	ADD PART NUMBER	C10-A864	C.J.
⚠	05.19.09	ADD PART NUMBER	C09-A402	T.H
⚠	02.25.09	ADD PART NUMBER	C09-A155	T.H
-	12.16.08	NEW	C08-AC18	MMR
LET	DATE	REVISION RECORD	NO.	CHKD

GENERAL TOLERANCE								
	10MAX	50MAX	100MAX	250MAX	2500VR	ANGLE	ECCENT
A	±0.15	±0.2	±0.3	±0.5	±0.75	±30'	0.1
B	±0.2	±0.3	±0.55	±0.95	±1.4	±30'	0.1
D	±0.3	±0.5	±0.8	±1.4	±2	±30'	0.15
SPECIFIED						MASS	

CUSTOMER				
CUSTOMER PART NO.		CUSTOMER DWG NO.		
OFFICE		TRIAL PART NO.		
VENDOR				
VENDOR NO.				
DWG TYPE	DWG SOURCE	DWG DATE	UNIT	SCL	ANGLE
R	7287-0955-30:R ⚠	12.16.08	22.22	5/1	S
APPROVED	CHECKED	CHECKED	DESIGN	DRAWN
			DEREK HARRIS	
12.16.08	12.16.08	12-16-08	09.12.06	12-16-08

MATL SPEC: SEE TABLE | TREAT. & FIN.: SEE NOTES

NAME 3P YESC 1.5mm REDUCED PITCH SEALED FEMALE SUB-ASSEMBLY (TOP LOCK)

PART NO. 7287-0955-30 ETC.

CH. CODE

DWG NO. 7287-0955-30:R

YAZAKI CORPORATION

ISSUE MARK