GENERAL TOLERANCE											
	10 MAX	50 MAX	100 MAX	250 MAX	250 OVR	R5 MAX	R10 MAX	R20 MAX	R20 OVR	ANGLE	ECCENT
A	±0.15	±0.2	±0.3	±0.5	±0.75	±0.2	±0.3	±0.5	±2.5	±3°	0.1
B	±0.2	±0.3	±0.55	±0.95	±1.4					±3°	0.1
C	±0.3	±0.5	±0.8	±1.4	±2					±3°	0.15

			NO.	HOUSING PART NO.	PART NAME	MATERIAL	COLOR
1			①	7183-9110-30	HOUSING (Option A)	PBT-G	BLACK
	1			7183-9111-40	HOUSING (Option B)	PBT-G	LIGHT GRAY
		1		7183-9112-80	HOUSING (Option C)	PBT-G	BROWN
1	1	1	②	7158-6640	FRONT HOLDER	PBT-G	NATURAL
△1 7283-9110-30,A	△1 7283-9111-40,A	△1 7283-9112-80,A	SUB ASSEMBLY PART NO.				

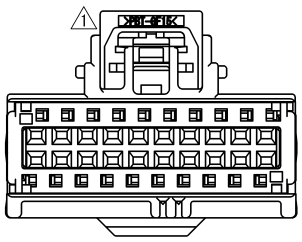

7283-9110-30(Option A)
BLACK

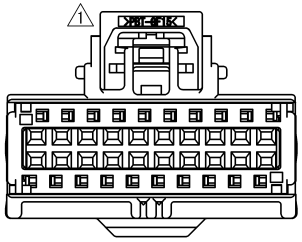

7283-9111-40(Option B)
LIGHT GRAY

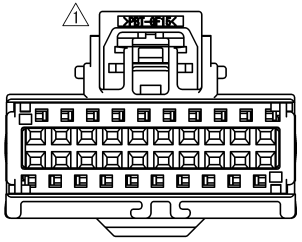

7283-9112-80(Option C)
BROWN

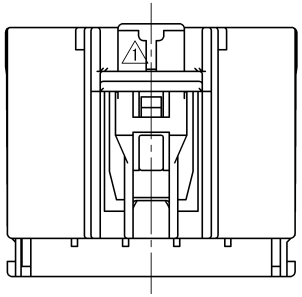

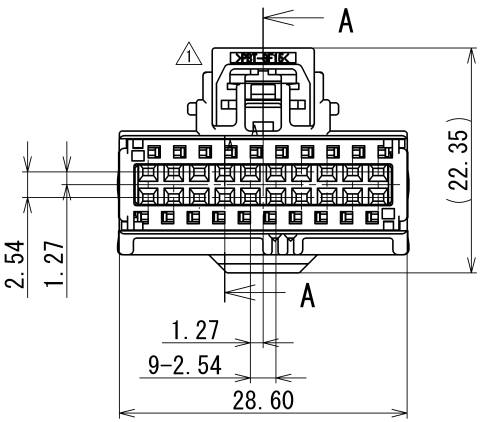

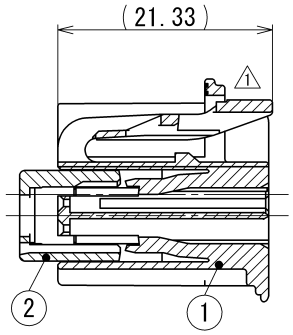

SEC. A-A

注記

1. 適用端子品番　: 7116-4618-02 ETC.
2. かん合相手品番　: USCAR 064-U-020-2-Z01

NOTES

1. APPLICABLE TERMINAL PART NO.　: 7116-4618-02 ETC.
2. MATING PART NO.　: USCAR 064-U-020-2-Z01

ISSUE MARK

LET	DATE	REVISION RECORD	NO.	CHKD
△2	10/10/15	CHANGED PART NAME	C10-ZA71	R.E
△1	06/09/26	CHANGED FORM ETC., A	C06-Z927	T.Y
	05/07/12	NEW	C05-ZA38	Y.W

GENERAL TOLERANCE							
	10MAX	50MAX	100MAX	250MAX	250OVR	ANGLE	ECCENT
A	±0.15	±0.2	±0.3	±0.5	±0.75	±30'	0.1
B	±0.2	±0.3	±0.55	±0.95	±1.4	±30'	0.1
C	±0.3	±0.5	±0.8	±1.4	±2	±30'	0.15

SPECIFIED　　MASS　g

CUSTOMER
CUSTOMER PART NO.　　CUSTOMER DWG NO.
OFFICE　　TRIAL PART NO.
VENDOR
VENDOR NO.

DWG TYPE	DWG SOURCE	DWG DATE	UNIT	SCL	ANGLE
R	NEW	05/07/12	mm	2:1	3

APPROVED	CHECKED	CHECKED	DESIGN	DRAWN
S.MIZUSE	———	R.CABANGAL	T.MIYAKAWA	R.ESPITAL
10/10/15	———	10/10/15	04/07/06	10/10/15

MATL. SPEC.　SEE TABLE　　TREAT. & FIN.

NAME △2 KAIZEN 0.64 SYSTEM UNSEALED
HOUSING 20P FEMALE SUB ASSEMBLY

PART NO. / CH. CODE　7283-9110-30 ETC.

DWG NO.　7283-9110-30:R　　SET DWG NO.

YAZAKI CORPORATION