SUB ASSEMBLY PART NO. AND CH. CODE	NO.	PART NO. AND CH. CODE	MATERIAL	COLOR	MATING PART NO.	QTY.
7283-5971-30	1	7183-5971-30	PBT	BLACK	7282-5971-30	1
	2	7158-5132-30	PBT	BLACK		1
7283-5971-80	1	7183-5971-80	PBT	BROWN	7282-5971-80	1
	2	7158-5132-80	PBT	BROWN		1

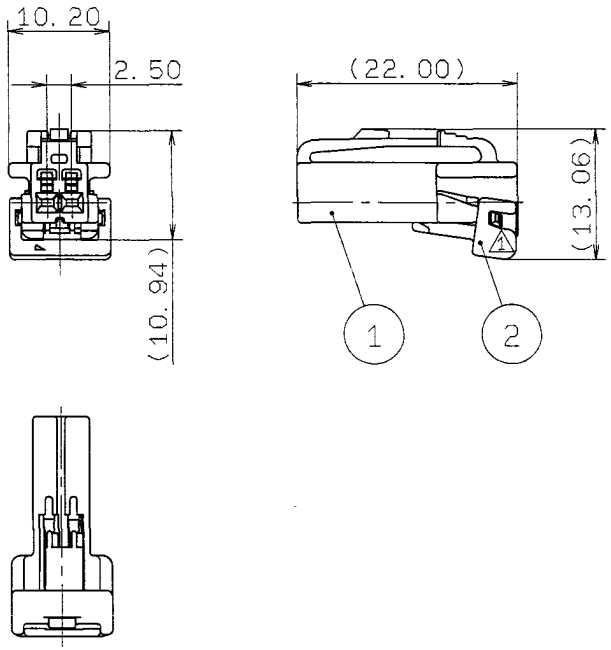

NOTE

1. APPLICABLE TERMINAL NO. : 7116-4233-02 ETC.

注記

1. 適用端子品番 : 7116-4233-02 ETC.

ISSUE MARK

LET	DATE	REVISION RECORD	NO.	CHKD
1	98.10.16	CHANGED FORM	C98-M756	M.K
	97.12.26	NEW	C97-N775	M.K

GENERAL TOLERANCE

	10MAX	50MAX	100MAX	250MAX	2500VR	ANGLE	ECCENT
A	±0.15	±0.2	±0.3	±0.5	±0.75	±30′	0.1
B	±0.2	±0.3	±0.55	±0.95	±1.4	±30′	0.1
©	±0.3	±0.5	±0.8	±1.4	±2	±30′	0.15

SPECIFIED

MASS g

CUSTOMER

CUSTOMER PART NO. | CUSTOMER DWG NO.

OFFICE | TRIAL PART NO.

VENDOR

VENDOR NO.

DWG TYPE	DWG SOURCE	DWG DATE	UNIT	SCL	ANGLE
R	NEW	97.12.26	mm	2/1	3

APPROVED	CHECKED	CHECKED	DESIGN	DRAWN
辻	[illegible]	樫山	KASHIYAMA	NAKAO
98.10.27	98.10.26	'98.10.30	97.11.27	98.10.16

MATL. SPEC. SEE TABLE

TREAT. & FIN.

NAME TK TYPE CONNECTOR 2P

SUB ASSEMBLY FEMALE

PART NO. CH. CODE 7283-5971-30 ETC.

DWG NO. 7283-5971-30:R

SET DWG NO.

YAZAKI CORPORATION