SUB ASS'Y PART NO.	NO.	PART NO.	PART NAME	MATERIAL	COLOR	QTY.
7283-5580-40	1	7183-5580-40	2.8 SYSTEM 7P FEMALE HOUSING △1	HPA	LIGHT GRAY	1
	2	7158-4208-50	2.8 SYSTEM 7P FEMALE FRONT HOLDER △1	HPA	ORANGE	1

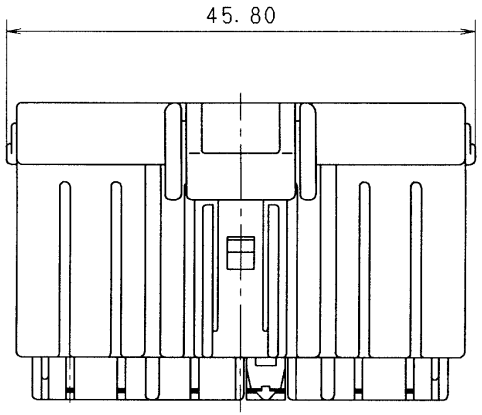

NOTES

△1 1. MATING PART No. : X49882-E165

2. APPLICABLE TERMINAL PART No's. : 7116-4110-02 etc.
EXCEPT 7116-4113-02

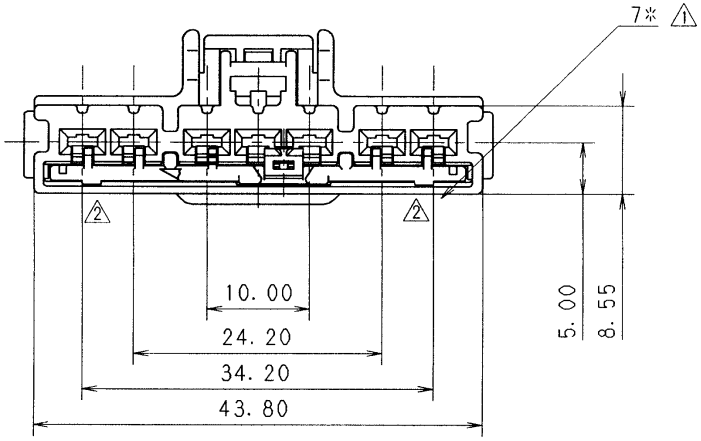

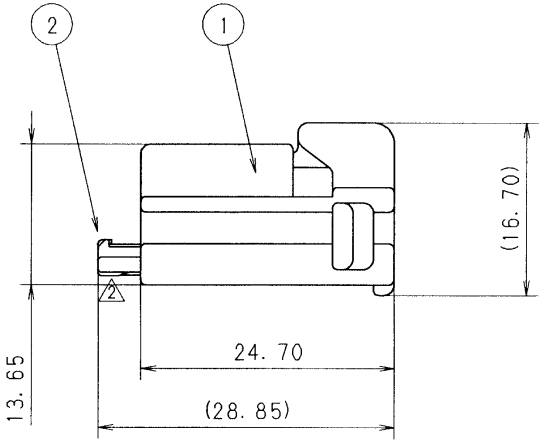

ISSUE MARK

△2	01/05/08	CHANGED SHAPE	C01-E133	M. L.
△1	99/02/19	CHANGED SHAPE	C99-E012	F. O.
--	98.02.04	NEW	C98-E018	J. B.
LET	DATE	REVISION RECORD	NO.	CHKD

GENERAL TOLERANCE

	10MAX	50MAX	100MAX	250MAX	2500VR	ANGLE	ECCENT
A	±0.15	±0.2	±0.3	±0.5	±0.75	±30'	0.1
B	±0.2	±0.3	±0.55	±0.95	±1.4	±30'	0.1
©	±0.3	±0.5	±0.8	±1.4	±2	±30'	0.15

SPECIFIED

WEIGHT 6.5 g

CUSTOMER

CUSTOMER PART NO. | CUSTOMER DWG NO.

OFFICE | TRIAL PART NO.

VENDOR

VENDOR NO.

DWG TYPE	DWG SOURCE	DWG DATE	UNIT	SCL	ANGLE
R	NEW	99/02/19	mm	2/1	3

APPROVED	CHECKED	CHECKED	DESIGN	DRAWN
17. May 2007			T. KODA	M. LE
			97.01.08	01/05/08

MATL. SPEC. SEE TABLE | TREAT. & FIN.

NAME 2.8 SYSTEM UNSEALED 7P (F) SUB-ASSEMBLY

PART NO. 7283-5580-40

DWG NO. 7283-5580-40:R

YAZAKI CORPORATION

A1