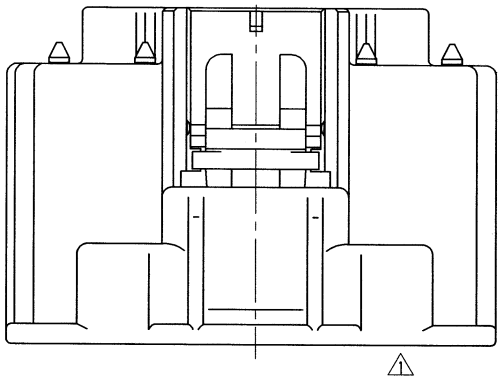

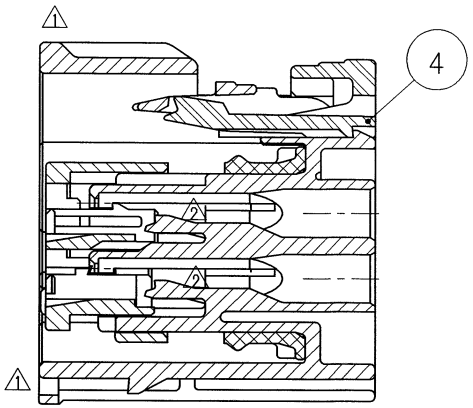

SEC. A-A (7283-5546-10 ETC.) △2

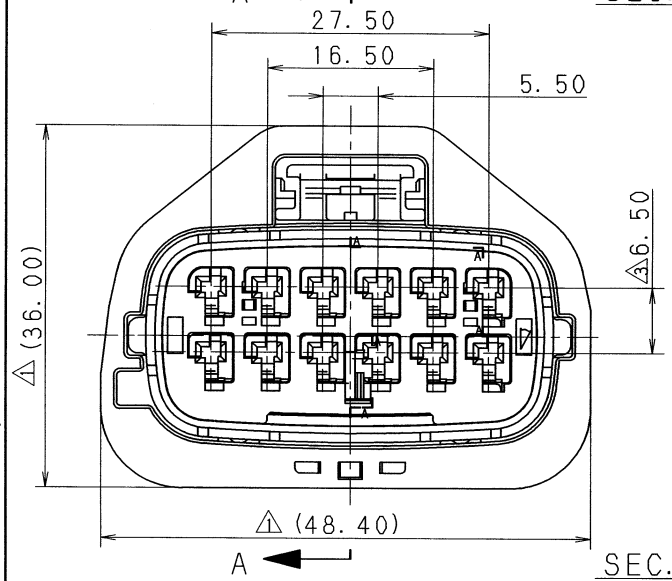

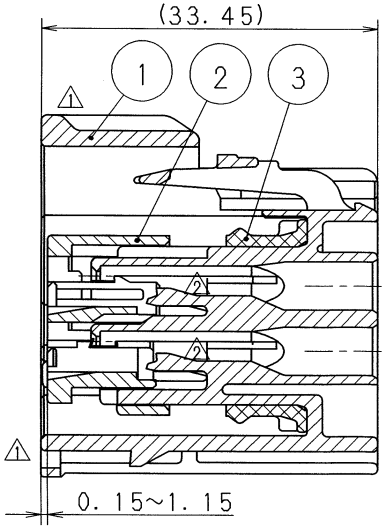

SEC. A-A (7283-5545-10 ETC.) △2

QTY.				NO.	PART NO. AND CH. CODE	MATERIAL	COLOR
		1	1	①	7183-5545-10	HPA	DARK GRAY
1	1				△2 7183-5545-30	HPA	BLACK
1	1	1	1	②	7158-4170	HPA	NATURAL
1	1	1	1	③	7137-2715-50	SILICONE RUBBER	RED
1		1		④	7158-7080-50	HPA	RED
△2 7283-5546-30	△2 7283-5545-30	7283-5546-10, A	7283-5545-10, A	SUB ASSEMBLY PART NO. AND CH. CODE			

注記

△3 1. 嵌合相手品番 :7282-5545-10 ETC.
2. 適用端子品番 :7116-4102-02 ETC.
3. 適用ゴム栓品番:7158-3030-50 ETC.

NOTES

△3 1. MATING PART NO. :7282-5545-10 ETC.
2. APPLICABLE TERMINAL PART NO. :7116-4102-02 ETC.
3. APPLICABLE WIRE SEAL NO. :7158-3030-50 ETC.

LET	DATE	REVISION RECORD	NO.	CHKD
△3	00.10.30	CHANGED NOTES & ADDED DIMENSION	C00-M343	E.O
△2	98.03.10	CHANGED FORM	C98-L338	T.T
△1	97.04.18	CHANGED FORM, A	C97-L550	H.K
	96.07.15	NEW	C96-M159	H.K

GENERAL TOLERANCE

	10MAX	50MAX	100MAX	250MAX	2500VR	ANGLE	ECCENT
A	±0.15	±0.2	±0.3	±0.5	±0.75	±30'	0.1
B	±0.2	±0.3	±0.55	±0.95	±1.4	±30'	0.1
C	±0.3	±0.5	±0.8	±1.4	±2	±30'	0.15

SPECIFIED

MASS g

CUSTOMER
CUSTOMER PART NO.
CUSTOMER DWG NO.
OFFICE
VENDOR
VENDOR NO.
TRIAL PART NO.

DWG TYPE	DWG SOURCE	DWG DATE	UNIT	SCL	ANGLE
R	NEW	96.07.15	mm	2/1	3

APPROVED	CHECKED	CHECKED	DESIGN	DRAWN
竹之内	斉藤	大住 和田	Y. TOMITA	Y. HATORI
'00.11.17	'00.11.17	'00.11.15	96.07.15	00.10.30

MATL. SPEC. SEE TABLE
TREAT. & FIN.
NAME 1.5 SYSTEM SEALED CONNECTOR 12P(F) SUB ASSEMBLY (TYPE-A)
PART NO. CH. CODE 7283-5545-10 ETC.
DWG NO. 7283-5545-10:R
SET DWG NO.
YAZAKI CORPORATION

ISSUE MARK