SUB ASSEMBLY PART NO. AND CH. CODE	NO.	PART NO. AND CH. CODE	MATERIAL	COLOR	QTY.
7283-5528-70,C (7C83-5528-70,C)	1	7183-5528-70 (7B83-5528-70)	HPA	YELLOW	1
	2	7158-4418 (7B58-4418)	HPA	NATURAL	1
	3	7158-4630 (7B58-4630)	HPA	NATURAL	1
	4	7144-1695 (7B44-1695)	STAINLESS STEEL	———	2

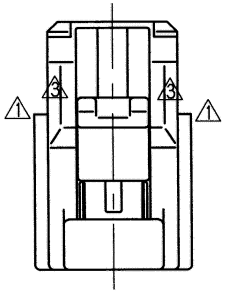

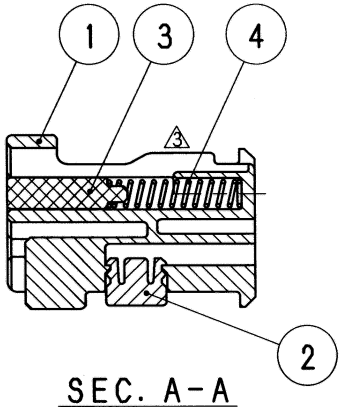

SEC. A-A

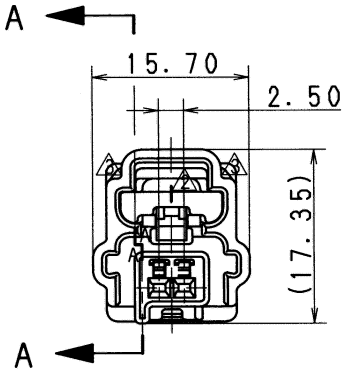

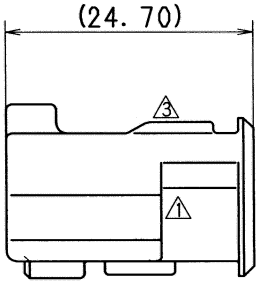

注 記

1. 嵌合相手品番：7282-5528-70 (7C82-5528-70)
2. 適用端子品番：7116-4233-08 (7B16-4233-08)
3. ( ) 内品番は、エアバッグ (A/B) 回路及び特別管理回路に使用する時に適用すること。

NOTES

1. MATING PART NO. :7282-5528-70 (7C82-5528-70)
2. APPLICABLE TERMINAL NO. :7116-4233-08 (7B16-4233-08)
3. PART NUMBERS IN PARENTHESIS SHALL BE USED FOR AIR BAG (A/B) CIRCUITS AND OTHER CIRCUITS DESIGNATED FOR SPECIAL MONITORING.

ISSUE MARK

LET	DATE	REVISION RECORD	NO.	CHKD
3	04/12/23	CHANGED FORM,C	C05-Z056	Y. I
2	98/10/08	CHANGED FORM,B	C98-M745	M. N
1	97/07/14	CHANGED FORM,A	C97-M442	M. T
	97/02/03	NEW	C97-L059	H. K

GENERAL TOLERANCE

	10MAX	50MAX	100MAX	250MAX	2500VR	ANGLE	ECCENT
A	±0.15	±0.2	±0.3	±0.5	±0.75	±30′	0.1
B	±0.2	±0.3	±0.55	±0.95	±1.4	±30′	0.1
C	±0.3	±0.5	±0.8	±1.4	±2	±30′	0.15

SPECIFIED

MASS g

CUSTOMER

CUSTOMER PART NO. | CUSTOMER DWG NO.

OFFICE | TRIAL PART NO.

VENDOR

VENDOR NO.

DWG TYPE	DWG SOURCE	DWG DATE	UNIT	SCL	ANGLE
R	NEW	97/02/03	mm	2:1	3

APPROVED	CHECKED	CHECKED	DESIGN	DRAWN
石川	—	前川	MATSUURA	A. PACABIS ROMEL GAVIZA
04.12.24	—	04.12.24	96/05/15	04/12/23

MATL. SPEC. SEE TABLE

TREAT. & FIN.

NAME A/B 1.0Ⅲ(040Ⅲ) 2P CONNECTOR HOUSING FEMALE SUB ASSEMBLY

PART NO. CH. CODE 7283-5528-70,C (7C83-5528-70,C)

DWG NO. 7283-5528-70:R

SET DWG NO.

YAZAKI CORPORATION