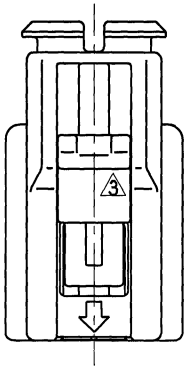

SUB ASSEMBLY PART NO. AND CH. CODE	NO.	PART NO. AND CH. CODE	⑥PART NAME	MATERIAL	COLOR	QTY.
7283-5524-70, F (7C83-5524-70, F)	1	7183-5524-70 (7B83-5524-70)	A/B 1.0Ⅲ 2P SEALED HOUSING FEMALE	HPA	YELLOW	1
	2	7158-4416 (7B58-4416)	A/B 1.0Ⅲ 2P SEALED SPACER FEMALE	HPA	NATURAL	1
	3	7137-2223 (7B37-2223)	A/B 1.0Ⅲ 2P SEALED PACKING	SILICONE RUBBER	BLACK	1
	4	7158-4415 (7B58-4415)	A/B 1.0Ⅲ 2P SLIDER	HPA	NATURAL	1
	5	7144-1692 (7B44-1692)	A/B 1.0Ⅲ SPRING	STAINLESS STEEL	———	2

注 記

1. かん相手品番 ： 7282-5524-70 (7C82-5524-70)
2. ( ) 内品番は、エアバッグ (A/B) 回路及び特別管理回路に使用する時に適用すること。
⑥ 3. 取扱説明書NO. YPES-15-288

NOTES

1. MATING PART NO. : 7282-5524-70 (7C82-5524-70)
2. PART NUMBERS IN PARENTHESIS SHALL BE USED FOR AIR BAG (A/B) CIRCUITS AND OTHER CIRCUITS DESIGNATED FOR SPECIAL MONITORING.
⑥ 3. HANDLING MANUAL NO. YPES-15-288

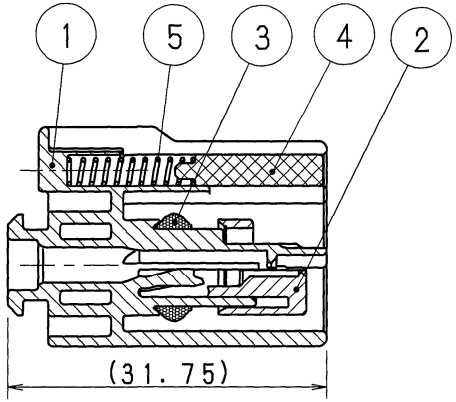

SEC. A-A

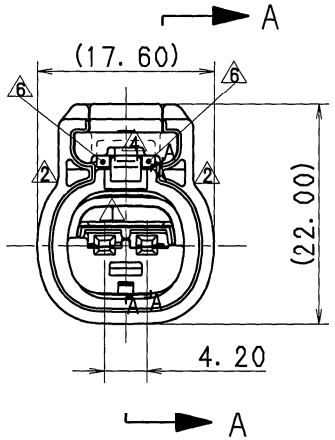

LET	DATE	REVISION RECORD	NO.	CHKD
⑥	2013/11/12	CHANGED FORM, F ETC.	C13-Z498	M. V
⑤	2001/03/23	CHANGED CODE, E	C01-X329	N. T
④	1998/03/13	CHANGED FORM, D	C98-L402	H. T
③	1997/09/26	CHANGED FORM, C	C97-N031	H. K
②	1997/07/02	CHANGED FORM, B	C97-M316	H. K
①	1997/02/14	CHANGED FORM, A	C97-L344	H. K
	1997/01/14	NEW	C96-N255	H. K

GENERAL TOLERANCE

	10MAX	50MAX	100MAX	250MAX	2500VR	ANGLE	ECCENT
A	±0.15	±0.2	±0.3	±0.5	±0.75	±30′	0.1
B	±0.2	±0.3	±0.55	±0.95	±1.4	±30′	0.1
C	±0.3	±0.5	±0.8	±1.4	±2	±30′	0.15

SPECIFIED

MASS g

CUSTOMER					
CUSTOMER PART NO.		CUSTOMER DWG NO.			
OFFICE		TRIAL PART NO.			
VENDOR					
VENDOR NO.					
DWG TYPE	DWG SOURCE	DWG DATE	UNIT	SCL	ANGLE
R	NEW	1997/01/14	mm	2:1	3
APPROVED	CHECKED	CHECKED	DESIGN	DRAWN	
M. FUKUDA	N. SAKAMOTO	———	OKAMOTO	M. VELICARIA	
2013/11/12	2013/11/12	———	1996/05/07	2013/11/12	

MATL. SPEC. SEE TABLE

TREAT. & FIN.

NAME ⑥A/B 1.0Ⅲ 2P SEALED HOUSING SUB ASSEMBLY FEMALE

PART NO. CH. CODE 7283-5524-70, F (7C83-5524-70, F)

DWG NO. 7283-5524-70:R

SET DWG NO.

YAZAKI CORPORATION

ISSUE MARK