SUB ASS'Y PART NO.	NO.	PART NO.	MATERIAL	COLOR	QTY.
7283-5623-60, B	1	7183-5623-60	HPA	GREEN	1
	2	△2 7158-4242-50	HPA	△2 RED	1
△1 7283-5623-30, B	1	7183-5623-30	HPA	BLACK	1
	2	△2 7158-4242-50	HPA	△2 RED	1

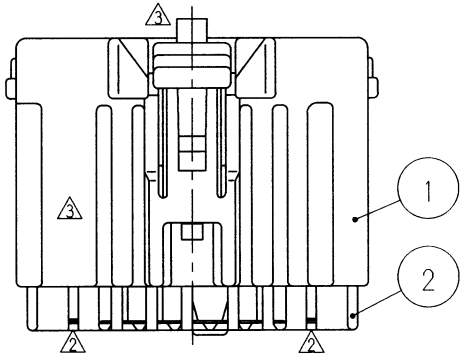

注 記

1. 適用端子品番 : 7116-4100-02 ETC. (1.5mm)
: 7116-4110-02 ETC. (2.8mm)
△1 2. 嵌合相手品番 : 7282-5623-60 ETC.

NOTES

1. APPLICABLE TERMINAL PART NO.
: 7116-4100-02 ETC. (1.5mm)
: 7116-4110-02 ETC. (2.8mm)
△1 2. MATING PART NO. : 7282-5623-60 ETC.

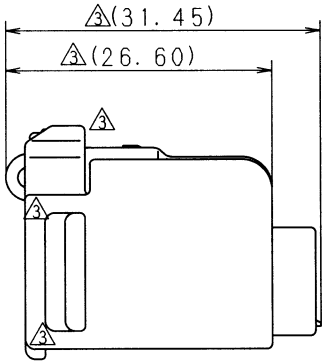

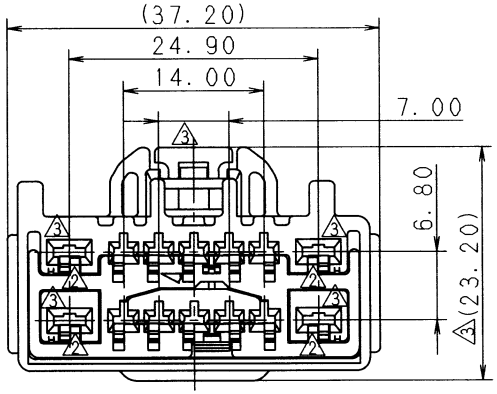

ISSUE MARK

LET	DATE	REVISION RECORD	NO.	CHKD
△3	97.04.08	CHANGED FORM, B	C97-L657	H.K
△2	97.02.17	CHANGED FORM, A	C97-L367	H.K
△1	96.09.21	ADDED PART NO.	C96-M699	H.K
	95.07.17	NEW	C95-M150	Y.U

GENERAL TOLERANCE

	10MAX	50MAX	100MAX	250MAX	2500VR	ANGLE	ECCENT
A	±0.15	±0.2	±0.3	±0.5	±0.75	±30'	0.1
B	±0.2	±0.3	±0.55	±0.95	±1.4	±30'	0.1
C	±0.3	±0.5	±0.8	±1.4	±2	±30'	0.15

SPECIFIED

MASS 9

CUSTOMER

CUSTOMER PART NO. | CUSTOMER DWG NO.

OFFICE | TRIAL PART NO.

VENDOR

VENDOR NO.

DWG TYPE	DWG SOURCE	DWG DATE	UNIT	SCL	ANGLE
R	NEW	95.07.17	mm	2/1	3

APPROVED	CHECKED	CHECKED	DESIGN	DRAWN
遠藤	横	寿蔵	Y. UCHIDA	AOYAMA 鈴木(貴)
'97.04.14.	97.04.14	97.04.10	95.06.26	97.04.08

MATL. SPEC. SEE TABLE | TREAT. & FIN.

NAME HYBRID SYSTEM CONNECTOR 14P

(1.5X10 + 2.8X4) (F) SUB ASS'Y (TYPE-B)

PART NO. CH. CODE △1 7283-5623-60 ETC.

DWG NO. 7283-5623-60:R | SET DWG NO.

YAZAKI CORPORATION