TABLE 1	SUB ASSEMBLY PART NO. AND CH. CODE	NO.	PART NO. AND CH. CODE	△3 PART NAME	MATERIAL	COLOR	QTY.
	△1 7283-0745-40 ETC.	①	△1 SEE TABLE 2	025 4P+090 2P SEALED HOUSING FEMALE	PBT	△1 SEE TABLE 2	1
		②	7158-6924	025 4P+090 2P SEALED FRONT HOLDER FEMALE	PBT-G	NATURAL	1
		③	7137-2022-80	025 4P+090 2P SEALED PACKING	SILICONE RUBBER	BROWN	1

△1 TABLE 2	SUB ASSEMBLY PART NO. AND CH. CODE	PART NO. AND CH. CODE	COLOR
	△2 7283-0745-40, A	7183-0745-40	LIGHT GRAY
△1	△2 7283-0745, A	7183-0745	NATURAL

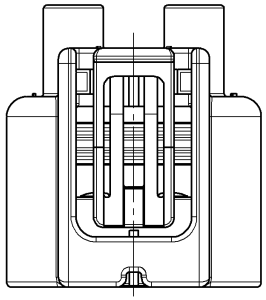

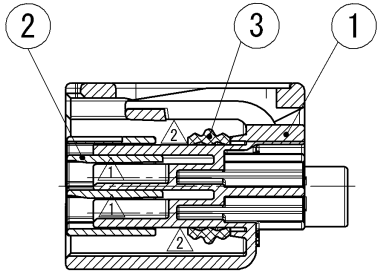

SEC. A-A

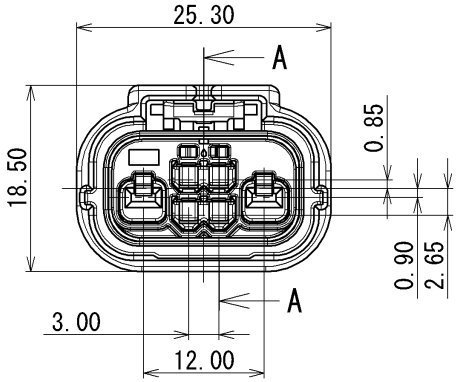

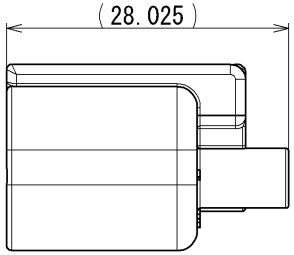

NOTES

1. APPLICABLE TERMINAL PART NO. : 7116-1366-02, 7116-1973-02, 7116-1367-02
2. APPLICABLE SEAL RUBBER PART NO.: 7157-3874-40, 7157-3872-60, 7157-3873-70
3. APPLICABLE UNUSED CAVITY PLUG PART NO.: 7157-8789-60

注記

1. 適用端子品番 : 7116-1366-02, 7116-1973-02, 7116-1367-02
2. 適用ゴム栓品番 : 7157-3874-40, 7157-3872-60, 7157-3873-70
3. 適用防水栓品番 : 7157-8789-60

GENERAL TOLERANCE

	10 MAX	50 MAX	100 MAX	250 MAX	250 OVR	R5 MAX	R10 MAX	R20 MAX	R20 OVR	ANGLE	ECCENT
A	±0.15	±0.2	±0.3	±0.5	±0.75					±3°	0.1
B	±0.2	±0.3	±0.55	±0.95	±1.4	±0.2	±0.3	±0.5	±2.5	±3°	0.1
Ⓒ	±0.3	±0.5	±0.8	±1.4	±2					±3°	0.15

ISSUE MARK

LET	DATE	REVISION RECORD	NO.	CHKD
△3	10/11/15	CHANGED PART NAME	C10-ZA92	F.V
△2	09/06/11	CHANGED FORM, A ETC.	C09-Z419	T.M
△1	06/11/24	ADDED PART NO., ETC.	C06-ZC82	K.N
	06/01/12	NEW	C06-Z089	K.N

GENERAL TOLERANCE

	10MAX	50MAX	100MAX	250MAX	250OVR	ANGLE	ECCENT
A	±0.15	±0.2	±0.3	±0.5	±0.75	±30'	0.1
B	±0.2	±0.3	±0.55	±0.95	±1.4	±30'	0.1
C	±0.3	±0.5	±0.8	±1.4	±2	±30'	0.15

SPECIFIED | MASS

CUSTOMER
CUSTOMER PART NO. | CUSTOMER DWG NO.
OFFICE | TRIAL PART NO.
VENDOR
VENDOR NO.

DWG TYPE	DWG SOURCE	DWG DATE	UNIT	SCL	ANGLE
R	NEW	06/01/12	mm	2:1	3

APPROVED	CHECKED	CHECKED	DESIGN	DRAWN
S. MIZUSE		R. CABANGAL	S. MITARAI	F. VELASQUEZ
10/11/15		10/11/15	05/11/01	10/11/15

MATL. SPEC. SEE TABLE | TREAT. & FIN.

NAME △3 025 4P + 090 2P SEALED HOUSING SUB ASSEMBLY FEMALE

PART NO. CH. CODE △1 7283-0745-40 ETC.

DWG NO. 7283-0745-40:R | SET DWG NO.

YAZAKI CORPORATION