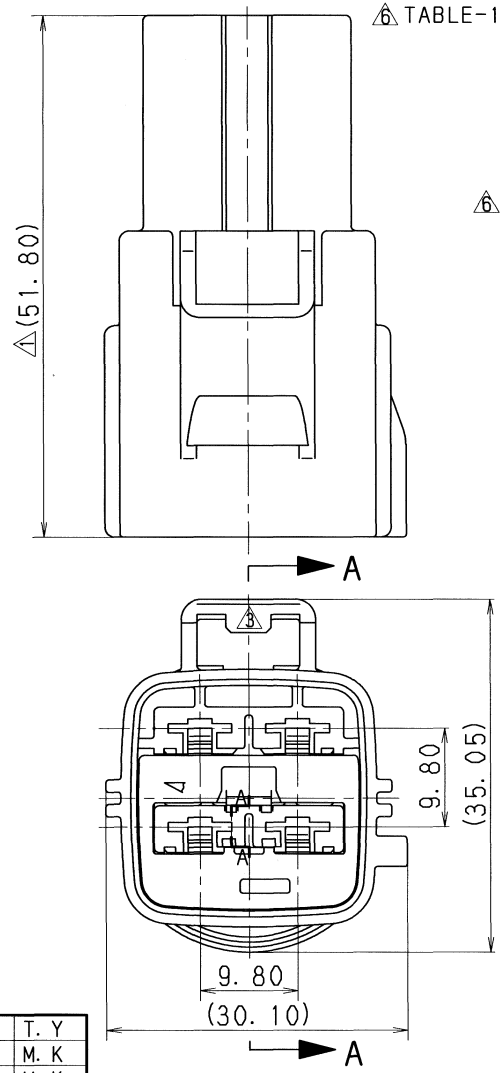

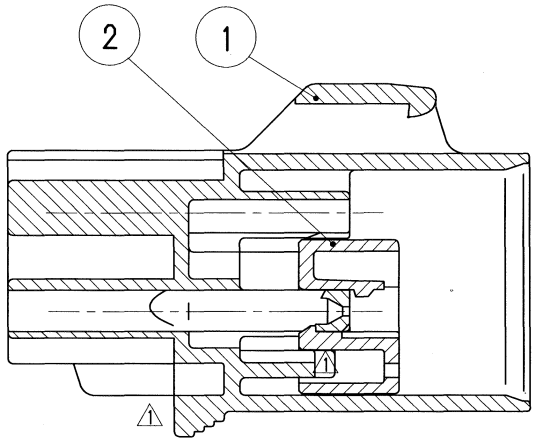

SEC. A-A

TABLE-1

SUB ASSEMBLY PART NO. AND CH. CODE	NO.	PART NO. AND CH. CODE	MATERIAL	COLOR	QTY.
7282-5595-10,C	1	7182-5595-10	HPA	DARK GRAY	1
	2	7158-4216	HPA	NATURAL	1
7282-5595-40,C	1	7182-5595-40	HPA	LIGHT GRAY	1
	2	7158-4216	HPA	NATURAL	1

TABLE-2

SUB ASSEMBLY PART NO. AND CH. CODE	MATING PART NO.
7282-5595-10,C	7283-5595-10 7283-5929-10
7282-5595-40,C	7283-5595-40

注 記

1. かん合相手品番 :TABLE-2 参照
2. 適用端子品番 :7114-4140-02 ETC.
3. 適用ゴム栓品番:7158-3081-50 ETC.
4. 適用防水栓品番:7158-3080-60

NOTES

1. MATING PART NO. :SEE TABLE-2
2. APPLICABLE TERMINAL PART NO. :7114-4140-02 ETC.
3. APPLICABLE WIRE SEAL PART NO. :7158-3081-50 ETC.
4. APPLICABLE PLUG PART NO. :7158-3080-60

LET	DATE	REVISION RECORD	NO.	CHKD
6	08. 08. 22	ADDED COLOR PART NO. ETC.	C08-Z533	T. Y
5	99. 11. 22	ADDED NOTES	C99-M760	M. K
4	99. 06. 29	CHANGED FORM, C	C99-L783	M. K
3	97. 03. 24	CHANGED FORM, B	C97-L502	H. K
2	96. 11. 12	CHANGED DIMENSION	C96-M904	H. K
1	96. 09. 21	CHANGED FORM, A	C96-M694	H. K
	96. 06. 06	NEW	C96-L974	H. K

GENERAL TOLERANCE

	10MAX	50MAX	100MAX	250MAX	2500VR	ANGLE	ECCENT
A	±0.15	±0.2	±0.3	±0.5	±0.75	±30′	0.1
B	±0.2	±0.3	±0.55	±0.95	±1.4	±30′	0.1
C	±0.3	±0.5	±0.8	±1.4	±2	±30′	0.15

SPECIFIED

MASS g

CUSTOMER	
CUSTOMER PART NO.	CUSTOMER DWG NO.
OFFICE	TRIAL PART NO.
VENDOR	
VENDOR NO.	

DWG TYPE	DWG SOURCE	DWG DATE	UNIT	SCL	ANGLE
R	NEW	96. 06. 06	mm	2/1	3

APPROVED	CHECKED	CHECKED	DESIGN	DRAWN
N. SUGIYAMA			IWAHORI	T. YAMAMOTO
98. 08. 22			96. 04. 10	08. 08. 22

ISSUE MARK

MATL. SPEC. SEE TABLE

TREAT. & FIN.

NAME 6.3 SYSTEM SEALED CONNECTOR 4P (M) SUB ASSEMBLY

PART NO. CH. CODE 6 7282-5595-10 ETC.

DWG NO. 7282-5595-10:R

SET DWG NO.

YAZAKI CORPORATION