△3 TABLE 1

SUB ASSEMBLY PART NO. AND CH. CODE	NO.	PART NO. AND CH. CODE	△3 PART NAME	MATERIAL	△3 COLOR	QTY.
7222-1424-40 ETC.	1	△3 SEE TABLE 2	MALE HOUSING	PBT	SEE TABLE 2	1
	2	7137-1550-80	LIP PACKING	SILICONE RUBBER	RED-IRON	1

△3 TABLE 2

SUB ASSEMBLY PART NO. AND CH. CODE	PART NO. AND CH. CODE	COLOR
7222-1424	7122-1424	NATURAL
7222-1424-30	7122-1424-30	BLACK
7222-1424-40	7122-1424-40	GRAY

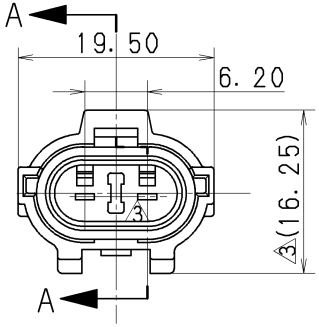

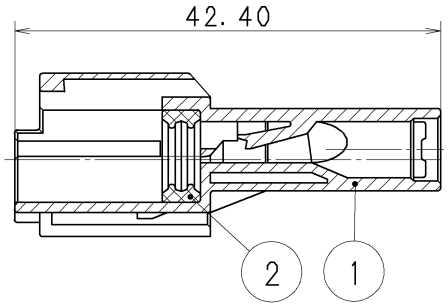

SEC. A-A

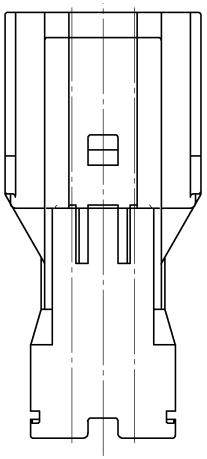

△2 NOTE

1. MATING PART NO. : 7123-1424-40 ETC.

△2 注記

1. かん合相手品番 : 7123-1424-40 ETC.

ISSUE MARK

LET	DATE	REVISION RECORD	NO.	CHKD
△3	09.06.02	CHANGED TABLE, ETC.	C09-Z410	T.K
△2	93.12.20	CHANGED FORM & RENEW	C93-L829	K.S

△3 GENERAL TOLERANCE

	10MAX	50MAX	100MAX	250MAX	2500VR	ANGLE	ECCENT
A	±0.15	±0.2	±0.3	±0.5	±0.75	±30′	0.1
B	±0.2	±0.3	±0.55	±0.95	±1.4	±30′	0.1
C	±0.3	±0.5	±0.8	±1.4	±2	±30′	0.15

SPECIFIED

MASS

CUSTOMER

CUSTOMER PART NO.

CUSTOMER DWG NO.

OFFICE

TRIAL PART NO.

VENDOR

VENDOR NO.

DWG TYPE	DWG SOURCE	DWG DATE	UNIT	SCL	ANGLE
R	RENEW	93.12.20	mm	△2 2/1	3

APPROVED	CHECKED	CHECKED	DESIGN	DRAWN
N. SUGIYAMA		T. KOBAYASHI	KODAMA	R. BUCE
09.06.02		09.06.02	88.01.23	09.06.02

MATL. SPEC. △3 SEE TABLE 1

TREAT. & FIN.

NAME SWP-TYPE CONNECTOR SUB ASS'Y 2P M

PART NO. 7222-1424-40 ETC.

DWG NO. 7222-1424-30:R

YAZAKI CORPORATION