GENERAL TOLERANCE											
	10 MAX	50 MAX	100 MAX	250 MAX	250 OVR	R5 MAX	R10 MAX	R20 MAX	R20 OVR	ANGLE	ECCENT
A	±0.15	±0.2	±0.3	±0.5	±0.75	±0.2	±0.3	±0.5	±2.5	±3°	0.1
B	±0.2	±0.3	±0.55	±0.95	±1.4					±3°	0.1
©	±0.3	±0.5	±0.8	±1.4	±2					±3°	0.15

	PART NO. AND CH. CODE	MATERIAL	COLOR
	7186-8846, A	PBT	NATURAL
2	7186-8846-60, A	PBT	GREEN
4	7186-8846-30, A	PBT	BLACK

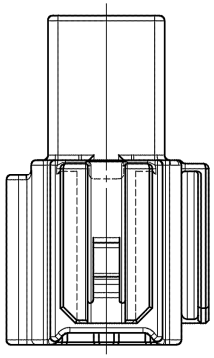

注記

2 1. かん合相手品番 : 7187-8846 ETC.

2. 適用端子品番 : 7114-7386-02 ETC.

NOTES

2 1. MATING PART NO. : 7187-8846 ETC.

2. APPLICABLE TERMINAL PART NO. : 7114-7386-02 ETC.

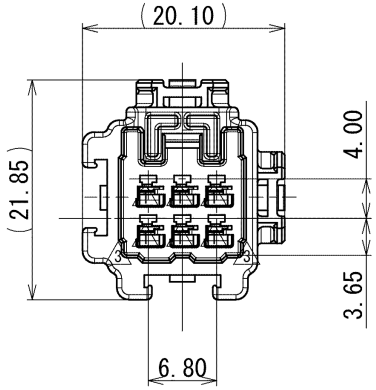

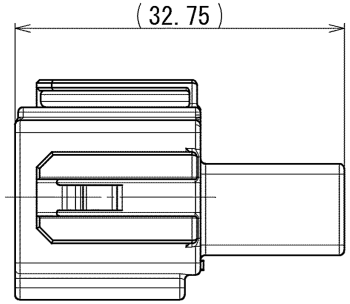

LET	DATE	REVISION RECORD	NO.	CHKD
4	2015/04/07	ADDED COLOR PART NO.	C15-Z136	A.Q
3	2014/08/27	CHANGED FORM	C14-Z492	A.Q
2	2012/02/09	ADDED COLOR NO. ETC.	C12-Z193	R.M
1	2012/01/11	CHANGED FORM, A	C12-Z054	J.C
	2011/11/24	NEW	C11-Z620	C.B

ISSUE MARK

GENERAL TOLERANCE							
	10MAX	50MAX	100MAX	250MAX	250OVR	ANGLE	ECCENT
A	±0.15	±0.2	±0.3	±0.5	±0.75	±30'	0.1
B	±0.2	±0.3	±0.55	±0.95	±1.4	±30'	0.1
C	±0.3	±0.5	±0.8	±1.4	±2	±30'	0.15

SPECIFIED

MASS

CUSTOMER

CUSTOMER PART NO. | CUSTOMER DWG NO.

OFFICE | TRIAL PART NO.

VENDOR

VENDOR NO.

DWG TYPE	DWG SOURCE	DWG DATE	UNIT	SCL	ANGLE
R	NEW	2011/11/24	mm	2:1	3

APPROVED	CHECKED	CHECKED	DESIGN	DRAWN
T.MATSUNAGA			K.MATSUMURA	A.QUIROL
2015/04/07			2011/08/30	2015/04/07

MATL. SPEC. 2 SEE TABLE

TREAT. & FIN.

NAME 060 6P HLC HOUSING MALE

PART NO. CH. CODE 2 7186-8846 ETC.

DWG NO. 7186-8846:R

SET DWG NO.

YAZAKI CORPORATION