GENERAL TOLERANCE											
	10MAX	50MAX	100MAX	250MAX	250OVR	R5 MAX	R10 MAX	R20 MAX	R20 OVR	ANGLE	ECCENT
A	±0.15	±0.2	±0.3	±0.5	±0.75	±0.2	±0.3	±0.5	±2.5	±3°	0.1
B	±0.2	±0.3	±0.55	±0.95	±1.4					±3°	0.1
C	±0.3	±0.5	±0.8	±1.4	±2					±3°	0.15

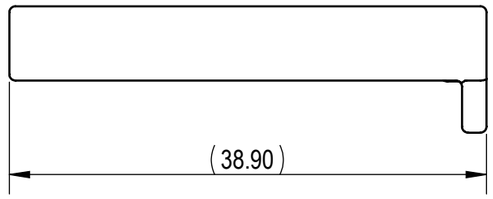

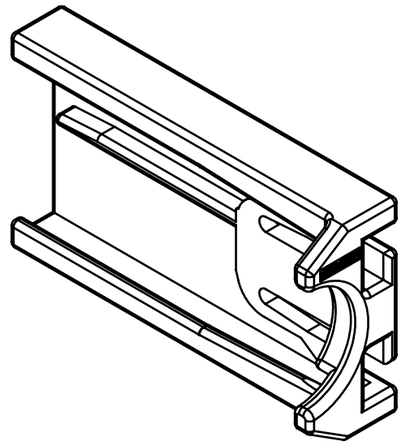

ISOMETRIC VIEW

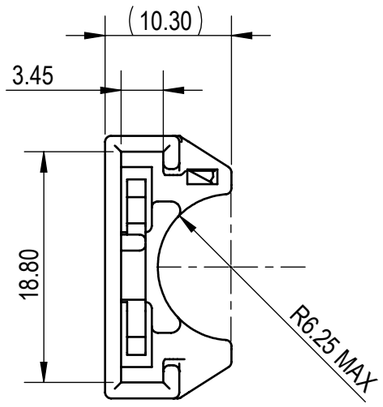

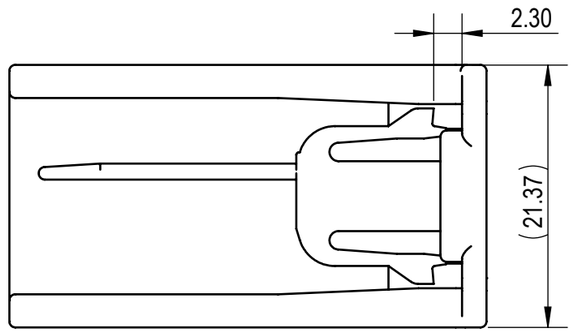

NOTES:
1. PART MUST BE FREE OF FLASH AND IMPERFECTIONS THAT AFFECT FUNCTION.
2. MATERIAL: NYLON GF35%
3. APPLICABLE HOUSING PART NO.: 7185-1065-40, 7185-1066-30.
4. PART TO COMPLY WITH YPES-31-038 REQUIREMENTS.

YAZAKI NORTH AMERICA INC
PROPRIETARY AND CONFIDENTIAL INFORMATION

ISSUE MARK

LET	DATE	REVISION RECORD	NO.	CHKD
-	8/14/2017	NEW	C17-A849	M.P.

GENERAL TOLERANCE							
	10MAX	50MAX	100MAX	250MAX	250OVR	ANGLE	ECCENT
A	±0.15	±0.2	±0.3	±0.5	±0.75	±30'	0.1
B	±0.2	±0.3	±0.55	±0.95	±1.4	±30'	0.1
C	±0.3	±0.5	±0.8	±1.4	±2	±30'	0.15

SPECIFIED

MASS (2.92) g

CUSTOMER FORD
CUSTOMER PART NO.
CUSTOMER DWG NO.
OFFICE YNA
TRIAL PART NO.
VENDOR
VENDOR NO.

DWG TYPE	DWG SOURCE	DWG DATE	UNIT	SCL	ANGLE
R	NEW	04/03/2018	mm	2:1	3

APPROVED	CHECKED	CHECKED	DESIGN	DRAWN
Digitally signed by Arun D'Souza DN: cn=Arun D'Souza, o=Yazaki, ou=COMBU, email=arun.dsouza@us.yazaki.com, c=US Date: 2018.04.16 16:54:17 -04'00'		A. Advey Digitally signed by A. Advey DN: cn=A. Advey, o, ou, email=Alexander.Advey@us.yazaki.com, c=US Date: 2018.04.03 11:13:32 -04'00'	M.PELZEL 04/03/2018	M.PELZEL 04/03/2018

MATL. SPEC. SEE NOTES
TREAT. & FIN. N/A

NAME 1P 14.5mm UNSEALED FEMALE CONNECTOR
90 DEGREE REAR COVER

PART NO. / CH. CODE 7185-0543

DWG NO. 7185-0543:R

SET DWG NO.

YAZAKI CORPORATION