YAZAKI PART NO.	COLOR
7182-4000, B	NATURAL
7182-4000-30, B	BLACK
7182-4000-60, B	GREEN
7182-4000-90, B	BLUE

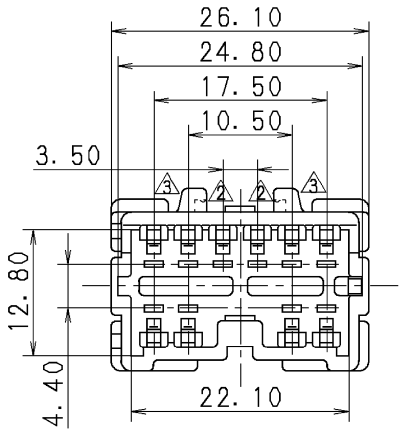

注　記

1. かん合相手品番 ： 7183-4000 ETC., 7123-8307 ETC.
2. 適用ターミナル品番 ： 7114-1470, 7114-1470-08
   7114-1475, 7114-1475-08
3. 適用リヤホルダ品番 ： 7157-4587-60

NOTES

1. MATING PART NO. : 7183-4000 ETC., 7123-8307 ETC.
2. APPLICABLE TERMINAL NO. : 7114-1470, 7114-1470-08
   7114-1475, 7114-1475-08
3. APPLICABLE REAR HOLDER NO. : 7157-4587-60

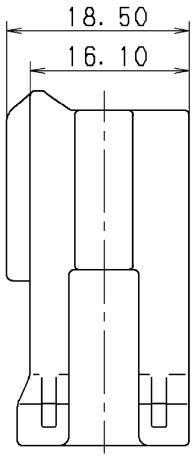

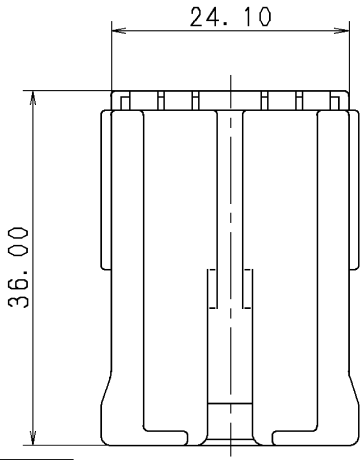

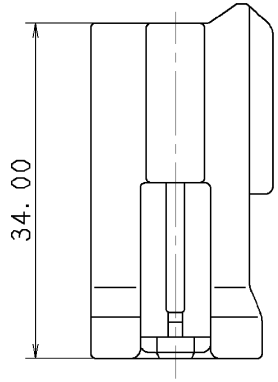

LET	DATE	REVISION RECORD	NO.	CHKD
4	10.11.15	CHANGED PART NAME	C10-ZB31	R. E
3	95.07.19	CHANGED FORM, B	C95-M037	T. O
2	95.04.20	CHANGED FORM, A	C95-L461	A. H
1	93.11.17	CHANGED REAR HOLDER COLOR NO.	C93-M159	M. S
	92.04.28	NEW	C92-L203	S. I

ISSUE MARK

GENERAL TOLERANCE

	10MAX	50MAX	100MAX	250MAX	250OVR	ANGLE	ECCENT
A	±0.15	±0.2	±0.3	±0.5	±0.75	±30′	0.1
B	±0.2	±0.3	±0.55	±0.95	±1.4	±30′	0.1
C	±0.3	±0.5	±0.8	±1.4	±2	±30′	0.15

SPECIFIED　　MASS

CUSTOMER
CUSTOMER PART NO.　　CUSTOMER DWG NO.
OFFICE　　TRIAL PART NO.
VENDOR
VENDOR NO.

DWG TYPE	DWG SOURCE	DWG DATE	UNIT	SCL	ANGLE
R	NEW	92.02.10	mm	2/1	3

APPROVED	CHECKED	CHECKED	DESIGN	DRAWN
S. MIZUSE	———	R. CABANGAL	M. ABE	R. EVANGELISTA
10.11.15	———	10.11.15	91.10.18	10.11.15

MATL. SPEC. PBT　　TREAT. & FIN.

NAME 4 SDLII HOUSING 10P MALE

PART NO. / CH. CODE 7182-4000 ETC.

DWG NO. 7182-4000:R

YAZAKI CORPORATION