GENERAL TOLERANCE											
	10 MAX	50 MAX	100 MAX	250 MAX	250 OVR	R5 MAX	R10 MAX	R20 MAX	R20 OVR	ANGLE	ECCENT
A	±0.15	±0.2	±0.3	±0.5	±0.75	±0.2	±0.3	±0.5	±2.5	±3°	0.1
B	±0.2	±0.3	±0.55	±0.95	±1.4					±3°	0.1
C	±0.3	±0.5	±0.8	±1.4	±2					±3°	0.15

PART NO. AND CH. CODE	COLOR
7182-2411	NATURAL
△2 7182-2411-30	BLACK
△2 7182-2411-40	△4 LIGHT GRAY
△1 7182-2411-50	ORANGE
△2 7182-2411-90	BLUE

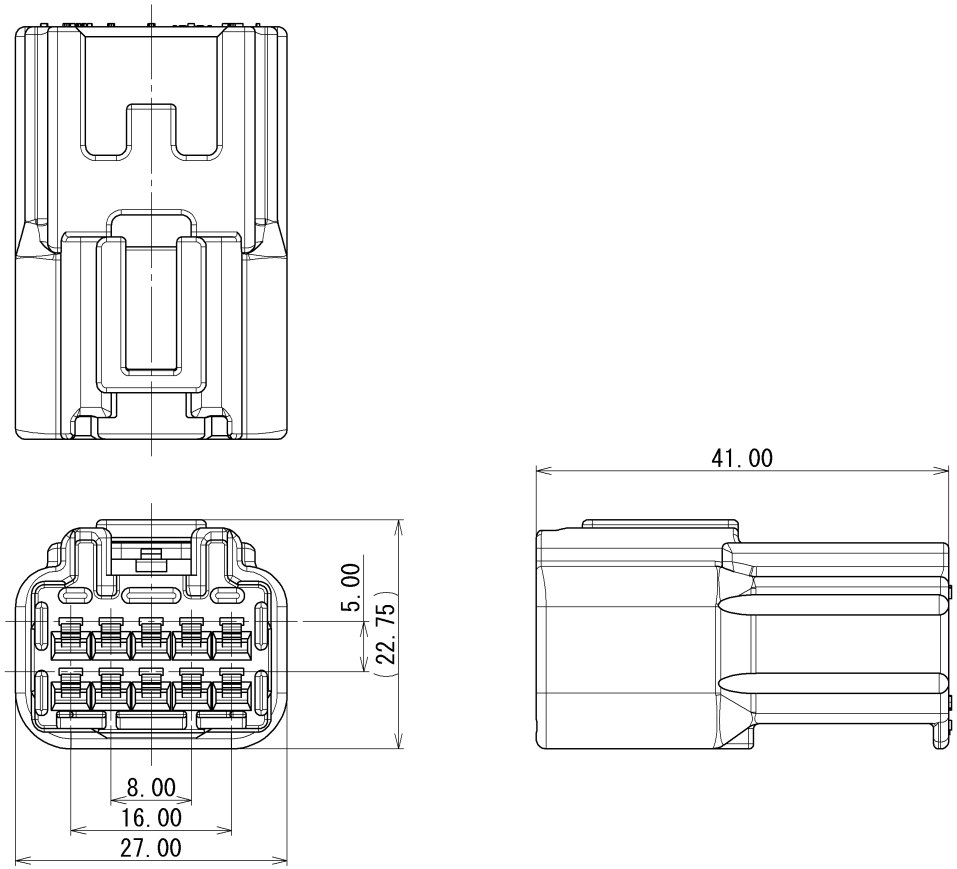

注記

1. かん合相手品番 : 7283-1305 ETC.
△4 2. 取扱説明書No. YPES-15-408

NOTES

1. MATING PART NO. 7283-1305 ETC.
△4 2. HANDLING MANUAL NO. YPES-15-408

LET	DATE	REVISION RECORD	NO.	CHKD
△4	12/03/15	ADDED NOTES ETC.	C12-Z314	E.O
△3	10/10/15	CHANGED PART NAME	C10-ZA76	R.S
△2	09/07/16	ADDED COLOR PART NO., ETC.	C09-Z483	T.M
△1	06/02/02	ADDED COLOR PART NO., ETC.	C06-Z103	E.S
	03/08/06	NEW	C03-X492	E.F

ISSUE MARK

GENERAL TOLERANCE							
	10MAX	50MAX	100MAX	250MAX	2500VR	ANGLE	ECCENT
A	±0.15	±0.2	±0.3	±0.5	±0.75	±30'	0.1
B	±0.2	±0.3	±0.55	±0.95	±1.4	±30'	0.1
C	±0.3	±0.5	±0.8	±1.4	±2	±30'	0.15

SPECIFIED

MASS

CUSTOMER

CUSTOMER PART NO.

CUSTOMER DWG NO.

OFFICE

TRIAL PART NO.

VENDOR

VENDOR NO.

DWG TYPE	DWG SOURCE	DWG DATE	UNIT	SCL	ANGLE
R	NEW	03/08/06	mm	2:1	3

APPROVED	CHECKED	CHECKED	DESIGN	DRAWN
M. FUKUDA	T. HIRAKAWA	T. HAMAI	E. FUKUDA	E. ORLANI
12/03/15	12/03/15	12/03/15	02/09/11	12/03/15

MATL. SPEC. PBT

TREAT. & FIN.

NAME △3 HLC 2.3Ⅱ 10P HOUSING MALE

PART NO. CH. CODE △1 7182-2411 ETC.

DWG NO. 7182-2411:R

SET DWG NO.

YAZAKI CORPORATION