TABLE 1

CIRCUIT DRAWING	PART NO. AND CH. CODE	NO.	PART NO. AND CH. CODE	MATERIAL & SPEC.	COLOR	QTY.
	7182-9632-30	①	————	PBT	BLACK	1
		②	7114-9822-02	BRASS(t=0.64) TIN PLATING	————	2
		③	7114-9339-02	BRASS(t=0.64) TIN PLATING	————	1
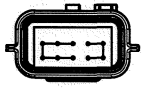	7182-9633-40	①	————	PBT	DARK GRAY	1
		③	7114-9339-02	BRASS(t=0.64) TIN PLATING	————	1
		④	7114-9824-02	BRASS(t=0.64) TIN PLATING	————	1

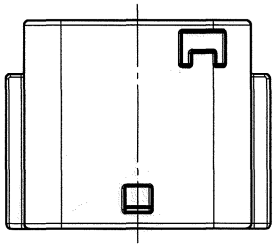

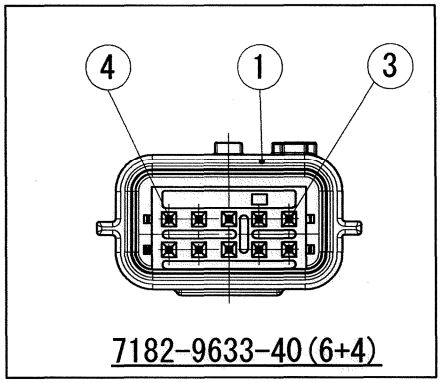

注記
1. 嵌合相手品番：7283-8856-30

NOTE
1. MATING PART NO. : 7283-8856-30

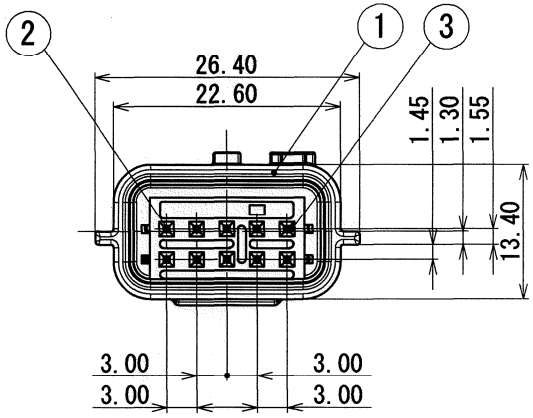

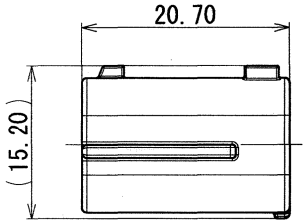

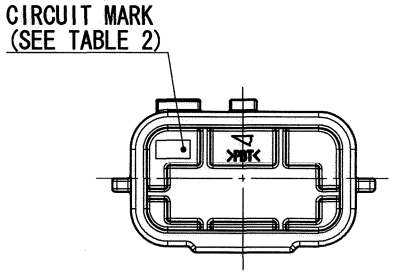

TABLE 2

PART NO. AND CH. CODE	CIRCUIT MARK
7182-9632-30	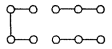
7182-9633-40	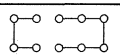

ISSUE MARK

LET	DATE	REVISION RECORD	NO.	CHKD
	05/09/15	NEW	C05-ZC60	O.S

GENERAL TOLERANCE

	10MAX	50MAX	100MAX	250MAX	2500VR	ANGLE	ECCENT
A	±0.15	±0.2	±0.3	±0.5	±0.75	±30'	0.1
B	±0.2	±0.3	±0.55	±0.95	±1.4	±30'	0.1
Ⓒ	±0.3	±0.5	±0.8	±1.4	±2	±30'	0.15

SPECIFIED

MASS g

CUSTOMER
CUSTOMER PART NO.
CUSTOMER DWG NO.
OFFICE
TRIAL PART NO.
VENDOR
VENDOR NO.

DWG TYPE	DWG SOURCE	DWG DATE	UNIT	SCL	ANGLE
R	NEW	05/09/15	mm	2:1	3

APPROVED	CHECKED	CHECKED	DESIGN	DRAWN
杉山 '05. 9. 22	———	浦野 '05.09.15	O. SUGIYAMA 05/02/03	G. BRAZIL KOMEL GALIZA 05/09/15

MATL. SPEC. SEE TABLE 1
TREAT. & FIN.
NAME RH10M-J/C
PART NO. CH. CODE 7182-9632-30 ETC.
DWG NO. 7182-9632-30:R
SET DWG NO.

YAZAKI CORPORATION