ITEM	PART NUMBER	APPLICABLE CONNECTOR PART NUMBER	MASS (g)
1	7174-2215-30	7289-7459-40	(1.54)

(2/1)

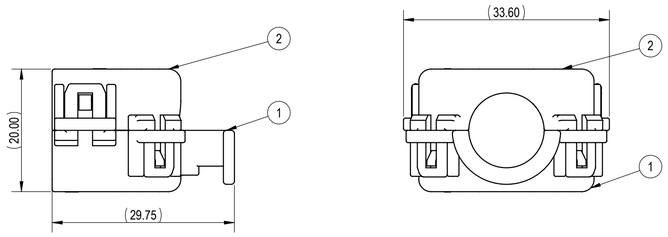

DRESS COVER ASSEMBLED DIMENSIONS

COMPONENT ASSEMBLY INFORMATION CHART		
ITEM	YAZAKI COMPONENT PART NUMBER	DESCRIPTION
1	7174-2215-30	DRESS COVER
2	7174-2216-30	DRESS COVER

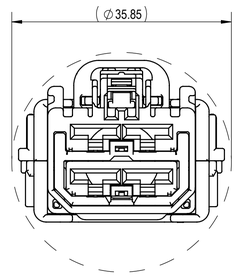

MINIMUM PASS-THROUGH
HOLE DIMENSION WITH 7289-7459-40
(1mm CLEARANCE ALL AROUND)
(2/1)

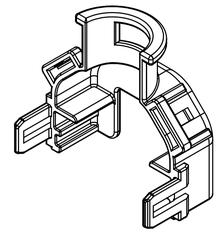

FRONT ISOMETRIC VIEW
(2/1)

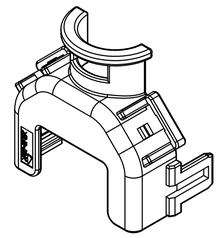

REAR ISOMETRIC VIEW
(2/1)

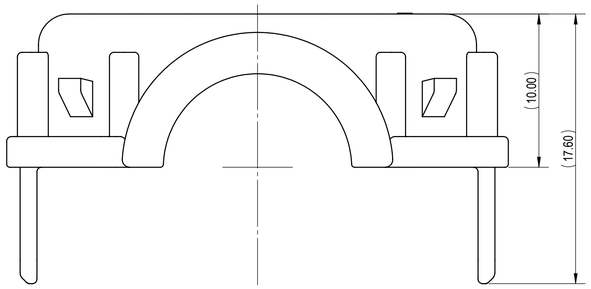

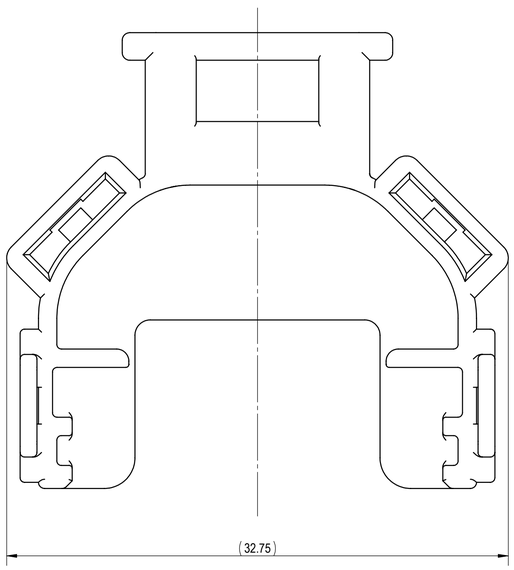

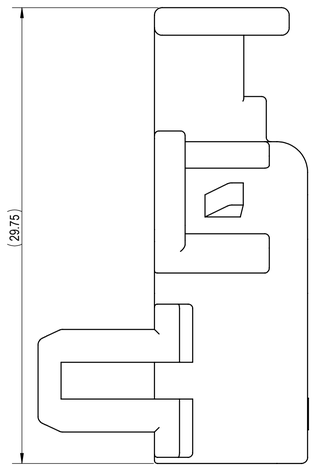

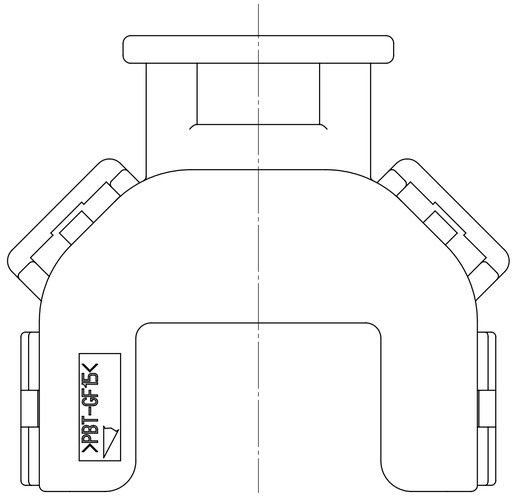

NOTES:

1. PARTS MUST BE PURCHASED FROM YAZAKI.
2. PARTS MUST BE FREE OF FLASH AND IMPERFECTIONS THAT AFFECT FUNCTION.
3. MATERIAL: PBT-GF15
4. COLOR: BLACK.
5. PART SATISFIES GMW3191, MARCH 2019, (TC2/SC1/VC1)
6. PART TO COMPLY WITH YPES-31-038 REQUIREMENTS.
7. THIS DRAWING IS TO BE USED FOR INTERNAL YAZAKI PSW SUBMISSION.

ISSUE MARK

GENERAL TOLERANCE											
	10MAX	50MAX	100MAX	250MAX	250OVR	R5 MAX	R10 MAX	R20 MAX	R20 OVR	ANGLE	ECCENT
A	±0.15	±0.20	±0.30	±0.50	±0.75	±0.20	±0.30	±0.50	±2.50	±3°	0.1
B	±0.20	±0.30	±0.55	±0.95	±1.40					±3°	0.1
C	±0.30	±0.50	±0.80	±1.40	±2.00					±3°	0.15
SPECIFIED										MASS	SEE TABLE

CUSTOMER						
CUSTOMER PART NO.		CUSTOMER DWG NO.				
OFFICE	YNA	TRIAL PART NO.				
VENDOR						
VENDOR NO.						
DWG TYPE	DWG SOURCE	DWG DATE	UNIT	SCL	ANGLE	
R	7174-2215-30:M △	06-21-21	mm	5/1	3	
APPROVED	CHECKED	CHECKED	DESIGN	DRAWN		
		Hector Avitia	DALE SILVERT 11-23-2020	ANDREA SOSA 07-13-21		

MATL. SPEC.: SEE NOTES
TREAT. & FIN.: N/A

NAME: 4P 6.3mm YESC UNSEALED FEMALE CONNECTOR DRESS COVER VERTICAL

PART NO. / CH. CODE: 7174-2215-30, ETC.

DWG NO.: 7174-2215-30:R

YAZAKI CORPORATION

LET	DATE	REVISION RECORD	NO.	CHKD
-	06-21-2021	NEW	C21-A497	A.S.

ITEM	PART NUMBER	APPLICABLE CONNECTOR PART NUMBER	MASS (g)
2	7174-2216-30	7289-7459-40	(1.30)

(2/1)

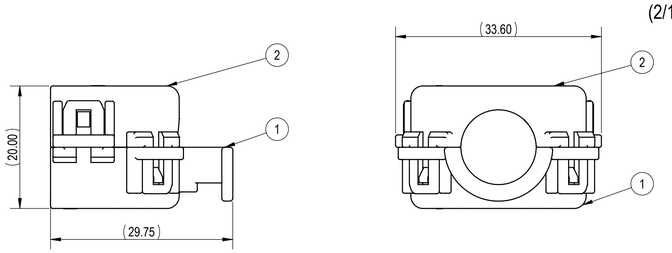

DRESS COVER ASSEMBLED DIMENSIONS

COMPONENT ASSEMBLY INFORMATION CHART		
ITEM	YAZAKI COMPONENT PART NUMBER	DESCRIPTION
1	7174-2215-30	DRESS COVER
2	7174-2216-30	DRESS COVER

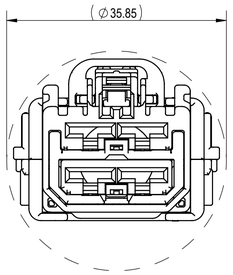

MINIMUM PASS-THROUGH
HOLE DIMENSION WITH 7289-7459-40
(1mm CLEARANCE ALL AROUND)
(2/1)

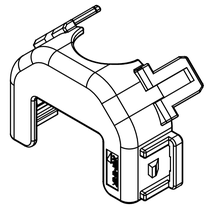

FRONT ISOMETRIC VIEW
(2/1)

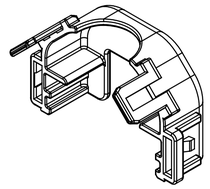

REAR ISOMETRIC VIEW
(2/1)

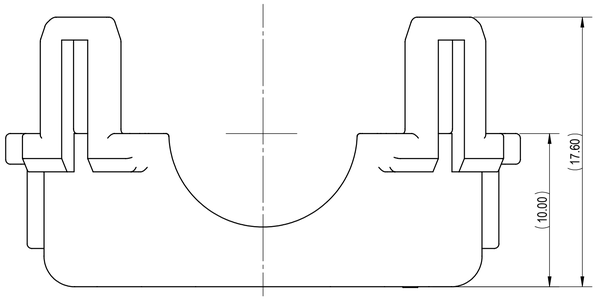

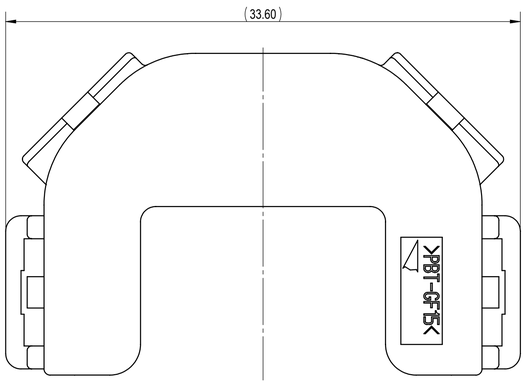

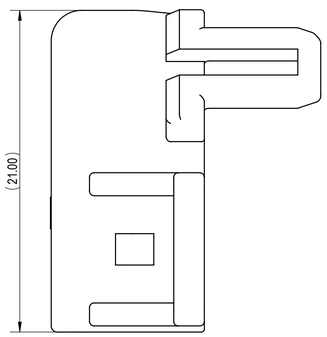

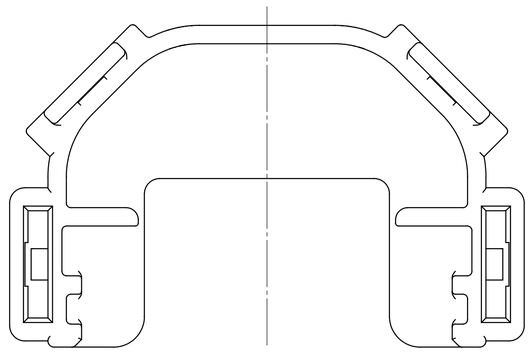

NOTES:

1. PARTS MUST BE PURCHASED FROM YAZAKI.
2. PARTS MUST BE FREE OF FLASH AND IMPERFECTIONS THAT AFFECT FUNCTION.
3. MATERIAL: PBT-GF15
4. COLOR: BLACK.
5. PART SATISFIES GMW3191, MARCH 2019, (TC2/SC1/VC1)
6. PART TO COMPLY WITH YPES-31-038 REQUIREMENTS.
7. THIS DRAWING IS TO BE USED FOR INTERNAL YAZAKI PSW SUBMISSION.

LET	DATE	REVISION RECORD	NO.	CHKD
-	06-21-2021	NEW	C21-A497	A.S.

GENERAL TOLERANCE											
	10MAX	50MAX	100MAX	250MAX	250OVR	R5 MAX	R10 MAX	R20 MAX	R20 OVR	ANGLE	ECCENT
A	±0.15	±0.20	±0.30	±0.50	±0.75	±0.20	±0.30	±0.50	±2.50	±3°	0.1
B	±0.20	±0.30	±0.55	±0.95	±1.40					±3°	0.1
C	±0.30	±0.50	±0.80	±1.40	±2.00					±3°	0.15
SPECIFIED										MASS SEE TABLE	

CUSTOMER						
CUSTOMER PART NO.		CUSTOMER DWG NO.				
OFFICE YNA		TRIAL PART NO.				
VENDOR						
VENDOR NO.						
DWG TYPE	DWG SOURCE	DWG DATE	UNIT	SCL	ANGLE	
R	7174-2215-30:M △	06-21-2021	mm	5/1	3	
APPROVED	CHECKED	CHECKED	DESIGN	DRAWN		
FOR APPROVAL SIGNATURE SEE PAGE 1			DALE SILVERT 11-23-2020	ANDREA SOSA 07-13-2021		

MATL. SPEC: SEE NOTES
TREAT. & FIN.: N/A

NAME: 4P 6.3mm YESC UNSEALED FEMALE CONNECTOR DRESS COVER VERTICAL

PART NO. / CH. CODE: 7174-2215-30, ETC.

DWG NO.: 7174-2215-30:R

YAZAKI CORPORATION

ISSUE MARK