GENERAL TOLERANCE											
	10 MAX	50 MAX	100 MAX	250 MAX	250 OVR	R5 MAX	R10 MAX	R20 MAX	R20 OVR	ANGLE	ECCENT
A	±0.15	±0.2	±0.3	±0.5	±0.75	±0.2	±0.3	±0.5	±2.5	±3°	0.1
B	±0.2	±0.3	±0.55	±0.95	±1.4					±3°	0.1
Ⓒ	±0.3	±0.5	±0.8	±1.4	±2					±3°	0.15

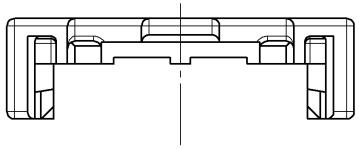

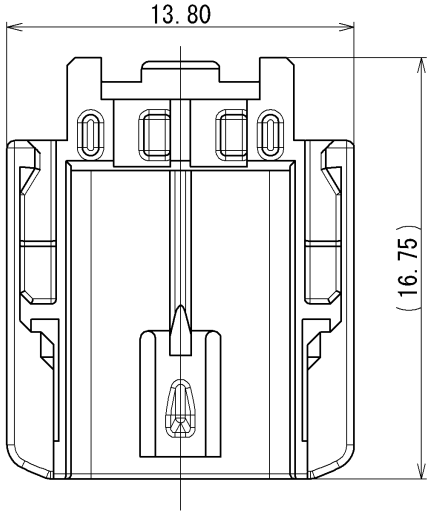

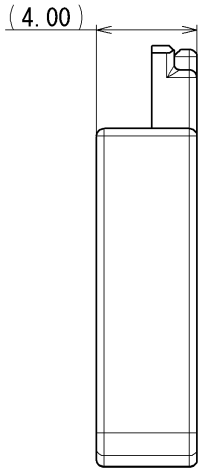

注記

1. 適用ハウジング品番 : 7287-7975-3W(7C87-7975-3W),
7287-7976-6W(7C87-7976-6W)

NOTE

1. APPLICABLE HOUSING PART NO.: 7287-7975-3W(7C87-7975-3W),
7287-7976-6W(7C87-7976-6W)

ISSUE MARK

LET	DATE	REVISION RECORD	NO.	CHKD
	2011/08/06	NEW	C11-Z535	R.B

GENERAL TOLERANCE							
	10MAX	50MAX	100MAX	250MAX	250OVR	ANGLE	ECCENT
A	±0.15	±0.2	±0.3	±0.5	±0.75	±30'	0.1
B	±0.2	±0.3	±0.55	±0.95	±1.4	±30'	0.1
C	±0.3	±0.5	±0.8	±1.4	±2	±30'	0.15

SPECIFIED

MASS

CUSTOMER					
CUSTOMER PART NO.		CUSTOMER DWG NO.			
OFFICE		TRIAL PART NO.			
VENDOR					
VENDOR NO.					
DWG TYPE	DWG SOURCE	DWG DATE	UNIT	SCL	ANGLE
R	NEW	2011/08/06	mm	5:1	3
APPROVED	CHECKED	CHECKED	DESIGN	DRAWN	
N.SUGIE	———	K.OHTAKA	K.OHTAKA	R.BUDIAO	
2011/08/06	———	2011/08/06	2010/04/20	2011/08/06	

MATL. SPEC. PBT(YELLOW)

TREAT. & FIN.

NAME SQUIB 2P COVER

PART NO. CH. CODE 7174-0477-70(7B74-0477-70)

DWG NO. 7174-0477-70:R

SET DWG NO.

YAZAKI CORPORATION