PART NUMBER	COLOR	MATERIAL	CABLE O.D. (mm)
7172-5734-80	BROWN	SILICONE	∅3.4mm - ∅3.7mm

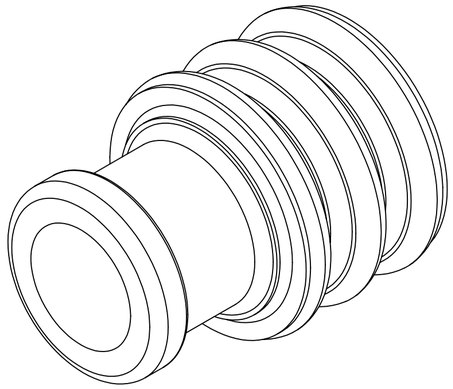

FRONT ISOMETRIC VIEW

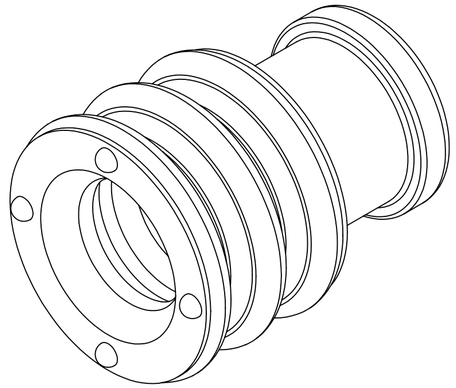

REAR ISOMETRIC VIEW

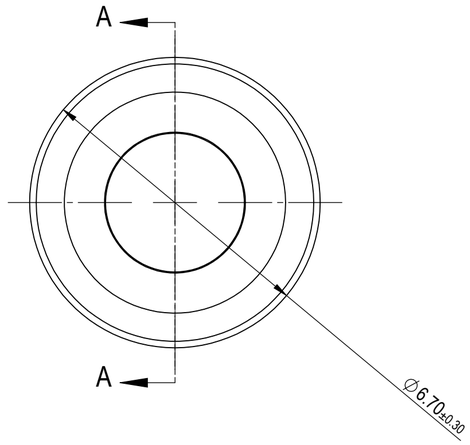

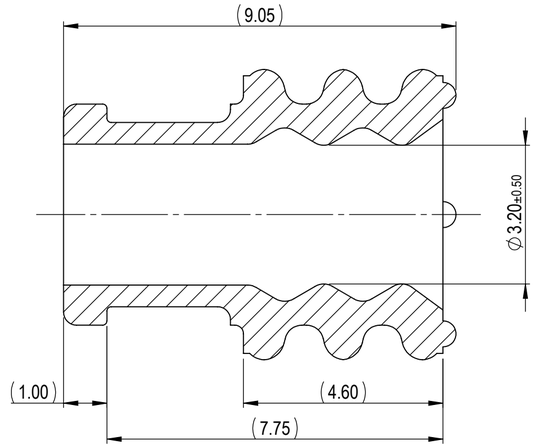

SECTION A-A

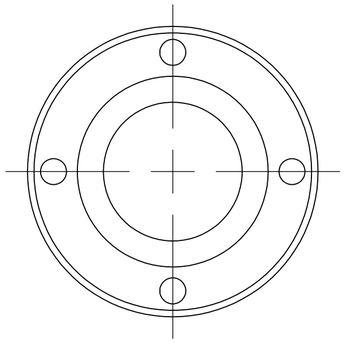

NOTES:
1. PARTS MUST BE PURCHASED FROM YAZAKI.
2. PARTS MUST BE FREE OF FLASH AND IMPERFECTIONS THAT AFFECT FUNCTION.
3. THIS CABLE SEAL REPLACES YAZAKI PART NUMBER 7172-5197-80.
4. MATERIAL: SEE TABLE
5. COLOR: SEE TABLE
6. PART SATISFIES USCAR-2, REVISION 6, FEBRUARY 2013, (T3, S3).
7. PART TO COMPLY WITH YPES-31-038 REQUIREMENTS.

ISSUE MARK

LET	DATE	REVISION RECORD	NO.	CHKD
-	07-17-2019	NEW	C19-A665	EH

GENERAL TOLERANCE

	10 MAX	50 MAX	100 MAX	250 MAX	250 OVR	R5 MAX	R10 MAX	R20 MAX	R20 OVR	ANGLE	ECCENT
A	±0.15	±0.2	±0.3	±0.5	±0.75					±3°	0.1
B	±0.2	±0.3	±0.55	±0.95	±1.4	±0.2	±0.3	±0.5	±2.5	±3°	0.1
C	±0.3	±0.5	±0.8	±1.4	±2					±3°	0.15

SPECIFIED

MASS (0.12) g

CUSTOMER					
CUSTOMER PART NO.		CUSTOMER DWG NO.			
OFFICE	YNA	TRIAL PART NO.			
VENDOR					
VENDOR NO.					
DWG TYPE	DWG SOURCE	DWG DATE	UNIT	SCL	ANGLE
R	7172-5734-80:M	07-17-2019	mm	10/1	3
APPROVED	CHECKED	CHECKED	DESIGN	DRAWN	
Jeremy Gagnon (Digitally signed by Jeremy Gagnon Date: 2019.10.18 15:37:18 -04'00')		James Littek (2019.10.18 15:14:55 - 04'00')	CHAD PARDO 02-15-2012	EVELYN HUANG 10-18-2019	

MATL. SPEC. SEE TABLE — TREAT. & FIN. N/A

NAME 2.8 SYSTEM SEALED CONNECTOR WIRE SEAL (ISO 4.0mm²)

PART NO. / CH. CODE 7172-5734-80

DWG NO. 7172-5734-80:R — SET DWG NO.

YAZAKI CORPORATION