RUBBER PART GENERAL TOLERANCE			
PART DIM.	1	2	3
0 TO 3	±0.2	±0.3	±0.4
3 TO 6	±0.2	±0.4	±0.5
6 TO 10	±0.3	±0.5	±0.6
10 TO 18	±0.3	±0.6	±0.8
18 TO 30	±0.4	±0.8	±1.0
30 TO 50	±0.5	±1.0	±1.5
50 TO 80	±0.6	±1.2	±2.0
80 TO 120	±0.7	±1.4	±2.5
120 TO 180	±0.8	±1.6	±3.0
180 TO 250	±1.0	±2.0	±4.0
250 TO 315	±1.2	±2.5	±5.0
315 TO 400	±1.5	±3.0	±6.0
400 TO 500	±1.8	±3.5	±7.0
500 OVER	±0.4%	±0.8%	±1.5%

PART NUMBER	NO.	PART NO.	PART NAME	MATERIAL	COLOR	QTY.	WEIGHT	WIRE O.D.	∅A
7172-5665-60	1	7173-4081-30	WIRE REAR HOLDER	PA66-GF35	BLACK	1	(3.73)g	8.30 ±0.30	6.40 ± 0.25
	2	N/A	N/A	SILICONE RUBBER	GREEN	1			
7172-5666-50	1	7173-4082-30	WIRE REAR HOLDER	PA66-GF35	BLACK	1	(3.22)g	11.00 ± 0.30	8.80 ± 0.25
	2	N/A	N/A	SILICONE RUBBER	RED	1			

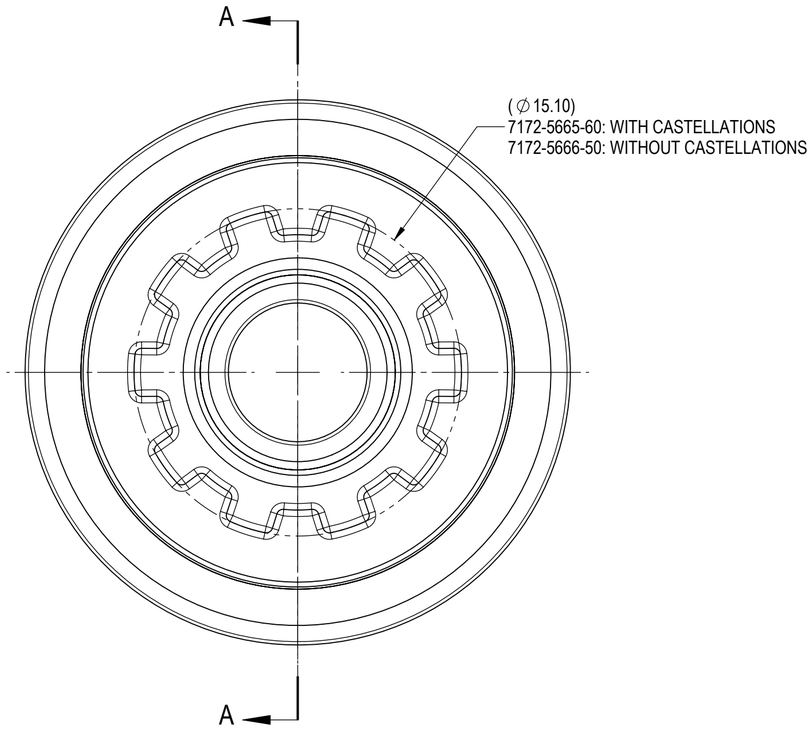

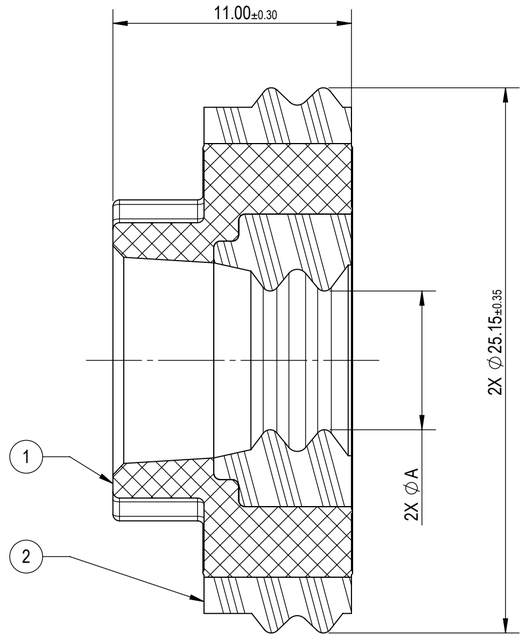

SECTION A-A

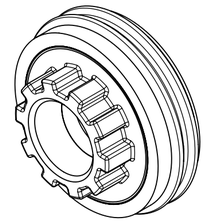

ISOMETRIC VIEW (2 : 1)
(7172-5665-60)

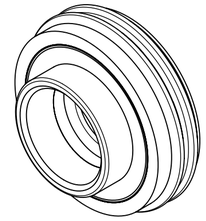

ISOMETRIC VIEW (2 : 1)
(7172-5666-50)

NOTES:

1. PARTS MUST BE PURCHASED FROM YAZAKI.
2. PARTS MUST BE FREE OF FLASH AND IMPERFECTIONS THAT AFFECT FUNCTION.
3. MATERIAL: SEE TABLE.
4. COLOR: SEE TABLE.
5. APPLICABLE SHIELD TERMINAL: SEE 7185-0499-02:R.
6. APPLICABLE WIRE: SEE TABLE.
7. PART TO COMPLY WITH YPES-31-038 REQUIREMENTS.

ISSUE MARK

LET	DATE	REVISION RECORD	NO.	CHKD
-	03/12/2019	NEW	C19-A239	K.P.

GENERAL TOLERANCE							
	10MAX	50MAX	100MAX	250MAX	250OVR	ANGLE	ECCENT
A	±0.15	±0.2	±0.3	±0.5	±0.75	±30'	0.1
B	±0.2	±0.3	±0.55	±0.95	±1.4	±30'	0.1
C	±0.3	±0.5	±0.8	±1.4	±2	±30'	0.15

SPECIFIED

MASS SEE TABLE

CUSTOMER					
CUSTOMER PART NO.		CUSTOMER DWG NO.			
OFFICE	YNA	TRIAL PART NO.			
VENDOR					
VENDOR NO.					
DWG TYPE	DWG SOURCE	DWG DATE	UNIT	SCL	ANGLE
R	7172-5665-60:M/2	04/18/2019	mm	5:1	3
APPROVED	CHECKED	CHECKED	DESIGN	DRAWN	
		Justin Gerwatowski	A. SAMPSON	K. PAKRAVAN	
			02/07/2018	04/18/2019	

MATL. SPEC. SEE NOTES

TREAT. & FIN. N/A

NAME 2P 8mm SP SEALED MALE CONNECTOR REAR SEAL

PART NO. CH. CODE 7172-5665-60 ETC.

DWG NO. 7172-5665-60:R

SET DWG NO.

YAZAKI CORPORATION