RUBBER PART GENERAL TOLERANCE			
PART DIM.	1	2	③
0 TO 3	±0.2	±0.3	±0.4
3 TO 6	±0.2	±0.4	±0.5
6 TO 10	±0.3	±0.5	±0.6
10 TO 18	±0.3	±0.6	±0.8
18 TO 30	±0.4	±0.8	±1.0
30 TO 50	±0.5	±1.0	±1.5
50 TO 80	±0.6	±1.2	±2.0
80 TO 120	±0.7	±1.4	±2.5
120 TO 180	±0.8	±1.6	±3.0
180 TO 250	±1.0	±2.0	±4.0
250 TO 315	±1.2	±2.5	±5.0
315 TO 400	±1.5	±3.0	±6.0
400 TO 500	±1.8	±3.5	±7.0
500 OVER	±0.4%	±0.8%	±1.5%

注記

1. 適用電線サイズ： CIVUS 0.35sq
2. △1 適用ハウジング品番： 7289-6868-30(7C89-6868-30)
3. △1 適用ターミナル品番： 7196-0805-02(7B96-0805-02)
4. △1 ( )内の品番はA/B回路及び特別管理回路に使用すること。

NOTES

1. APPLICABLE WIRE SIZE: CIVUS 0.35sq
2. △1 APPLICABLE HOUSING : 7289-6868-30(7C89-6868-30)
3. △1 APPLICABLE TERMINAL: 7196-0805-02(7B96-0805-02)
4. △1 PART NUMBERS IN PARENTHESIS SHALL BE USED FOR AIR/BAG(A/B) CIRCUITS AND OTHER CIRCUITS DESIGMATED FOR SPECIAL MONITORING.

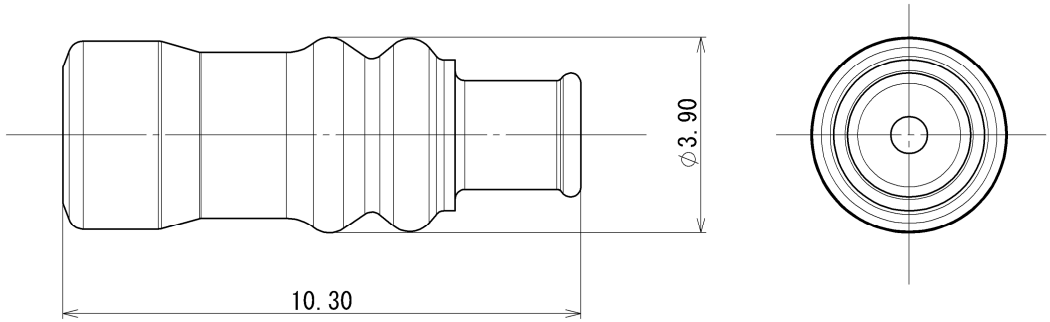

ISSUE MARK

LET	DATE	REVISION RECORD	NO.	CHKD
△1	2018/06/06	ADDED A/B NO., ETC.	C18-Y104	D.M
	2017/02/01	NEW	C17-Z024	A.Q

GENERAL TOLERANCE							
	10MAX	50MAX	100MAX	250MAX	2500VR	ANGLE	ECCENT
A	±0.15	±0.2	±0.3	±0.5	±0.75	±30'	0.1
B	±0.2	±0.3	±0.55	±0.95	±1.4	±30'	0.1
C	±0.3	±0.5	±0.8	±1.4	±2	±30'	0.15

SPECIFIED

MASS △1 (0.1) g

CUSTOMER		
CUSTOMER PART NO.	CUSTOMER DWG NO.	
OFFICE	TRIAL PART NO.	
VENDOR		
VENDOR NO.		

DWG TYPE	DWG SOURCE	DWG DATE	UNIT	SCL	ANGLE
R	NEW	2017/02/01	mm	2:1	3

APPROVED	CHECKED	CHECKED	DESIGN	DRAWN
T.MATSUNAGA	R.OHFUKU	———	R.OHFUKU	D.MAI
2018/06/06	2018/06/06	———	2016/12/14	2018/06/06

MATL. SPEC. SILICONE RUBBER(BROWN) TREAT. & FIN.

NAME A/B 1.2 2P SEALED WIRE SEAL

PART NO. CH. CODE △1 7172-5540-80(7B72-5540-80)

DWG NO. 7172-5540-80:R SET DWG NO.

YAZAKI CORPORATION