PART NUMBER	COLOR	MATERIAL	X	APPLICABLE TERMINAL	CABLE O.D. (mm)	MASS (g)
7172-5728-30	BLACK	AEM ELASTOMER	0.80	7116-4102-02	Ø1.20 - Ø1.70	(0.10)
7172-5727-30			1.30	7116-4103-02	Ø1.63 - Ø2.20	

(10/1)

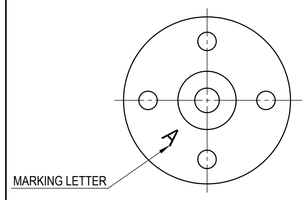

7172-5728-30

(10/1)

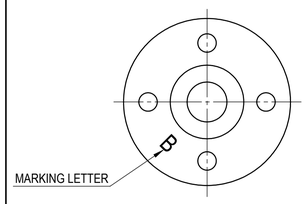

7172-5727-30

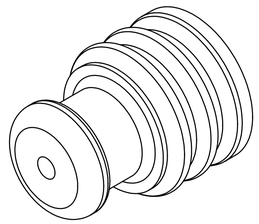

FRONT ISOMETRIC VIEW
(10/1)

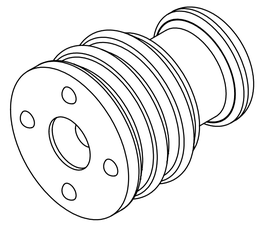

REAR ISOMETRIC VIEW
(10/1)

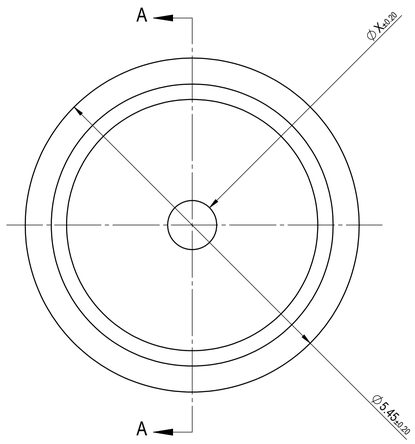

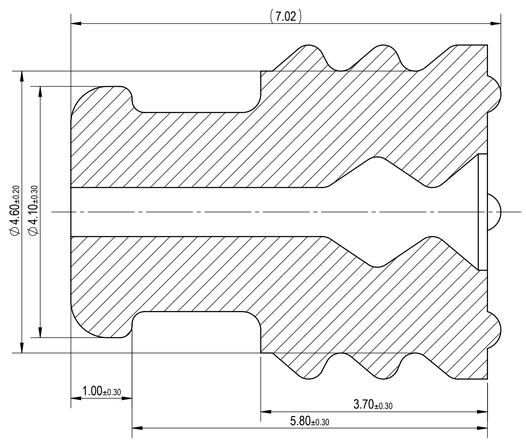

SECTION A-A

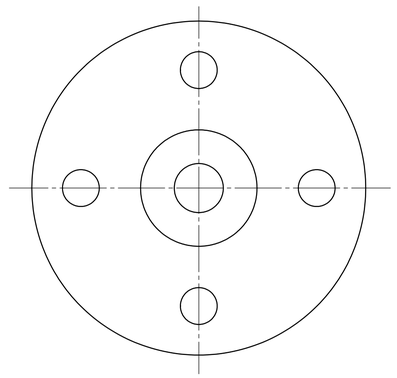

NOTES:

1. PARTS MUST BE PURCHASED FROM YAZAKI.
2. PARTS MUST BE FREE OF FLASH AND IMPERFECTIONS THAT AFFECT FUNCTION.
3. APPLICABLE TERMINAL: SEE TABLE.
4. PART SATISFIES USCAR-2, REVISION 6, FEBRUARY 2013, (T3/V2/S3).
5. PART TO COMPLY WITH YPES-31-038 REQUIREMENTS.
6. THIS DRAWING IS TO BE USED FOR INTERNAL YAZAKI PSW SUBMISSION.
7. HANDLING MANUAL NUMBER: YPES-15-298E

LET	DATE	REVISION RECORD	NO.	CHKD
-	10-02-2018	NEW	C18-A947	A.C.

GENERAL TOLERANCE

	10MAX	50MAX	100MAX	250MAX	250OVR	R5 MAX	R10 MAX	R20 MAX	R20 OVR	ANGLE	ECCENT
A	±0.15	±0.20	±0.30	±0.50	±0.75	±0.20	±0.30	±0.50	±2.50	±3°	0.1
B	±0.20	±0.30	±0.55	±0.95	±1.40					±3°	0.1
Ⓒ	±0.30	±0.50	±0.80	±1.40	±2.00					±3°	0.15
SPECIFIED										MASS	SEE TABLE

CUSTOMER					
CUSTOMER PART NO.		CUSTOMER DWG NO.			
OFFICE	YNA	TRIAL PART NO.			
VENDOR					
VENDOR NO.					
DWG TYPE	DWG SOURCE	DWG DATE	UNIT	SCL	ANGLE
R	7172-5728-30:M △1	10-02-2018	mm	20/1	3
APPROVED	CHECKED	CHECKED	DESIGN	DRAWN	
jeremy.gagnon@us.yazaki.com Digitally signed by jeremy.gagnon@us.yazaki.com Date: 2018.10.11 19:49:42 -04'00'			ADRIAN WARGA KANE 04-04-2018	ALEJANDRO CALLEROS 10-12-2018	

MATL. SPEC. SEE TABLE | TREAT. & FIN. N/A

NAME 1.5 SYSTEM SEALED CONNECTOR
TRANSMISSION FLUID WIRE SEAL

PART NO. CH. CODE 7172-5728-30, ETC.

DWG NO. 7172-5728-30:R

YAZAKI CORPORATION

ISSUE MARK