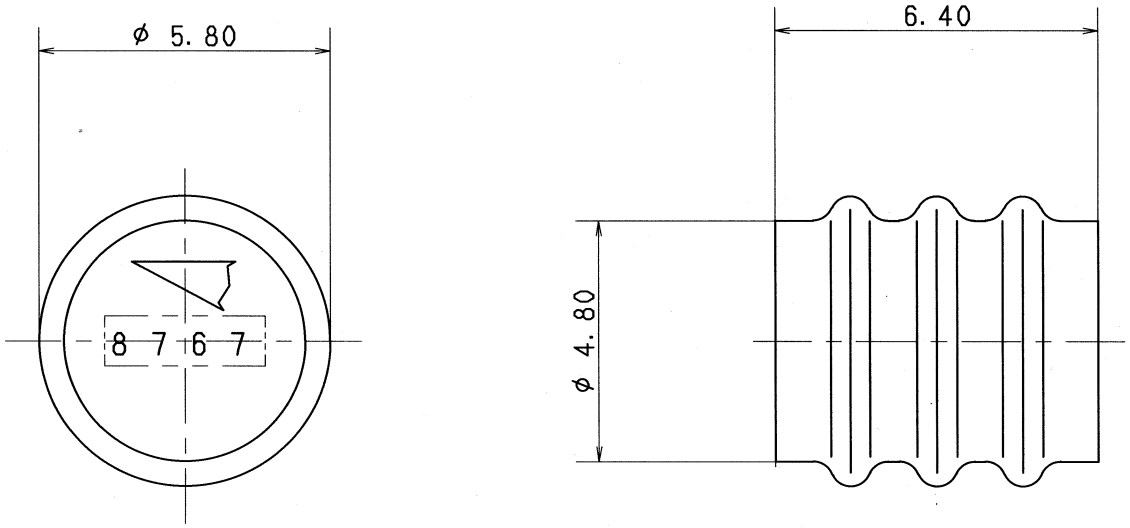

RUBBER PART GENERAL TOLERANCE			
PART DIM.	1	2	③
0 TO 3	± 0.2	± 0.3	± 0.4
3 TO 6	± 0.2	± 0.4	± 0.5
6 TO 10	± 0.3	± 0.5	± 0.6
10 TO 18	± 0.3	± 0.6	± 0.8
18 TO 30	± 0.4	± 0.8	± 1.0
30 TO 50	± 0.5	± 1.0	± 1.5
50 TO 80	± 0.6	± 1.2	± 2.0
80 TO 120	± 0.7	± 1.4	± 2.5
120 TO 180	± 0.8	± 1.6	± 3.0
180 TO 250	± 1.0	± 2.0	± 4.0
250 TO 315	± 1.2	± 2.5	± 5.0
315 TO 400	± 1.5	± 3.0	± 6.0
400 TO 500	± 1.8	± 3.5	± 7.0
500 OVER	± 0.4 %	± 0.8 %	± 1.5 %

ISSUE MARK

LET	DATE	REVISION RECORD	NO.	CHKD
	2007/03/12	NEW	C07-Z165	C. T

GENERAL TOLERANCE	10MAX	50MAX	100MAX	250MAX	2500VR	ANGLE	ECCENT
A	±0.15	±0.2	±0.3	±0.5	±0.75	±30′	0.1
B	±0.2	±0.3	±0.55	±0.95	±1.4	±30′	0.1
C	±0.3	±0.5	±0.8	±1.4	±2	±30′	0.15

SPECIFIED

MASS g

CUSTOMER					
CUSTOMER PART NO.	CUSTOMER DWG NO.				
OFFICE	TRIAL PART NO.				
VENDOR					
VENDOR NO.					
DWG TYPE	DWG SOURCE	DWG DATE	UNIT	SCL	ANGLE
R	NEW	2007/03/12	mm	10:1	3
APPROVED	CHECKED	CHECKED	DESIGN	DRAWN	
山梨	鈴木	鳥居	TSUJI	C. AGCAOILI	
07.03.15	07.03.13	2007/03/13	1985/08/27	2007/03/12	

MATL. SILICONE RUBBER SPEC. (RED-IRON) | TREAT. & FIN.

NAME 2.3 W/P CONNECTOR PLUGGING RUBBER STOPPER

PART NO. / CH. CODE 7157-8767-80

DWG NO. 7157-8767-80:R | SET DWG NO.

YAZAKI CORPORATION