⚠1 NO.	YAZAKI PART NO.	MATERIAL	COLOR
1	7157-6410-70	NYLON-66	YELLOW
2	7157-6410-40	NYLON-66	GRAY

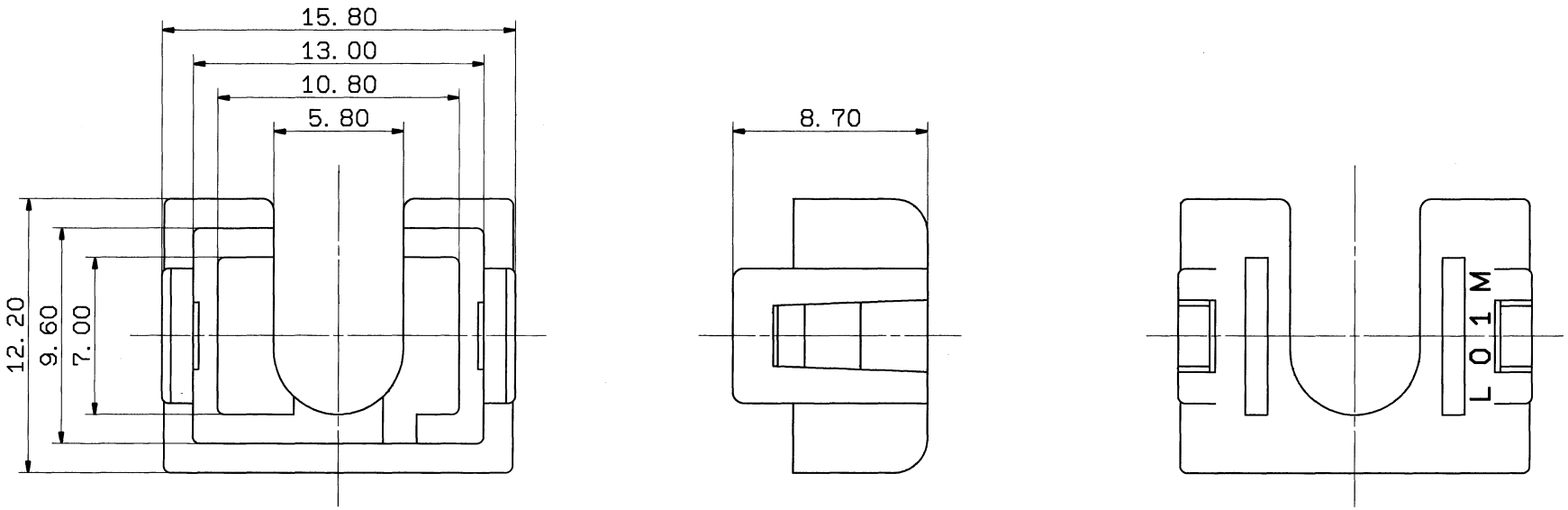

⚠1 注記

嵌合相手品番:7157-6410-70・・・7122-4110

:7157-6410-40・・・7122-4113-30

⚠1 NOTE

MATING PART NO. :7157-6410-70・・・7122-4110

:7157-6410-40・・・7122-4113-30

ISSUE MARK

LET	DATE	REVISION RECORD	NO.	CHKD
⚠1	93.11.08	CHANGED DWG. NO. ETC.	C93-7088	Y. I
-	88.03.17	NEW	8MC-4033	H. S

GENERAL TOLERANCE

	10MAX	50MAX	100MAX	250MAX	2500VR	ANGLE	ECCENT
A	±0.15	±0.2	±0.3	±0.5	±0.75	±30'	0.1
B	±0.2	±0.3	±0.55	±0.95	±1.4	±30'	0.1
©	±0.3	±0.5	±0.8	±1.4	±2	±30'	0.15

SPECIFIED

MASS g

CUSTOMER

CUSTOMER PART NO. | CUSTOMER DWG NO.

OFFICE | TRIAL PART NO.

VENDOR

VENDOR NO.

DWG TYPE	DWG SOURCE	DWG DATE	UNIT	SCL	ANGLE
R	NEW	88.03.17	mm	5/1	3

APPROVED	CHECKED	CHECKED	DESIGN	DRAWN
93.11.8	93.11.08	93.11.08	H. SAKAI 88.03.17	IWAHORI 93.11.08

MATL. SPEC. SEE TABLE

TREAT. & FIN.

NAME L TYPE CONNECTOR REAR HOLDER FOR MALE HOUSING 1P

PART NO. 7157-6410-40 ETC.

DWG NO. ⚠1 7157-6410-40:R

YAZAKI CORPORATION