RUBBER PART GENERAL TOLERANCE			
PART DIM.	1	2	③
0 TO 3	± 0.2	± 0.3	± 0.4
3 TO 6	± 0.2	± 0.4	± 0.5
6 TO 10	± 0.3	± 0.5	± 0.6
10 TO 18	± 0.3	± 0.6	± 0.8
18 TO 30	± 0.4	± 0.8	± 1.0
30 TO 50	± 0.5	± 1.0	± 1.5
50 TO 80	± 0.6	± 1.2	± 2.0
80 TO 120	± 0.7	± 1.4	± 2.5
120 TO 180	± 0.8	± 1.6	± 3.0
180 TO 250	± 1.0	± 2.0	± 4.0
250 TO 315	± 1.2	± 2.5	± 5.0
315 TO 400	± 1.5	± 3.0	± 6.0
400 TO 500	± 1.8	± 3.5	± 7.0
500 OVER	± 0.4%	± 0.8%	± 1.5%

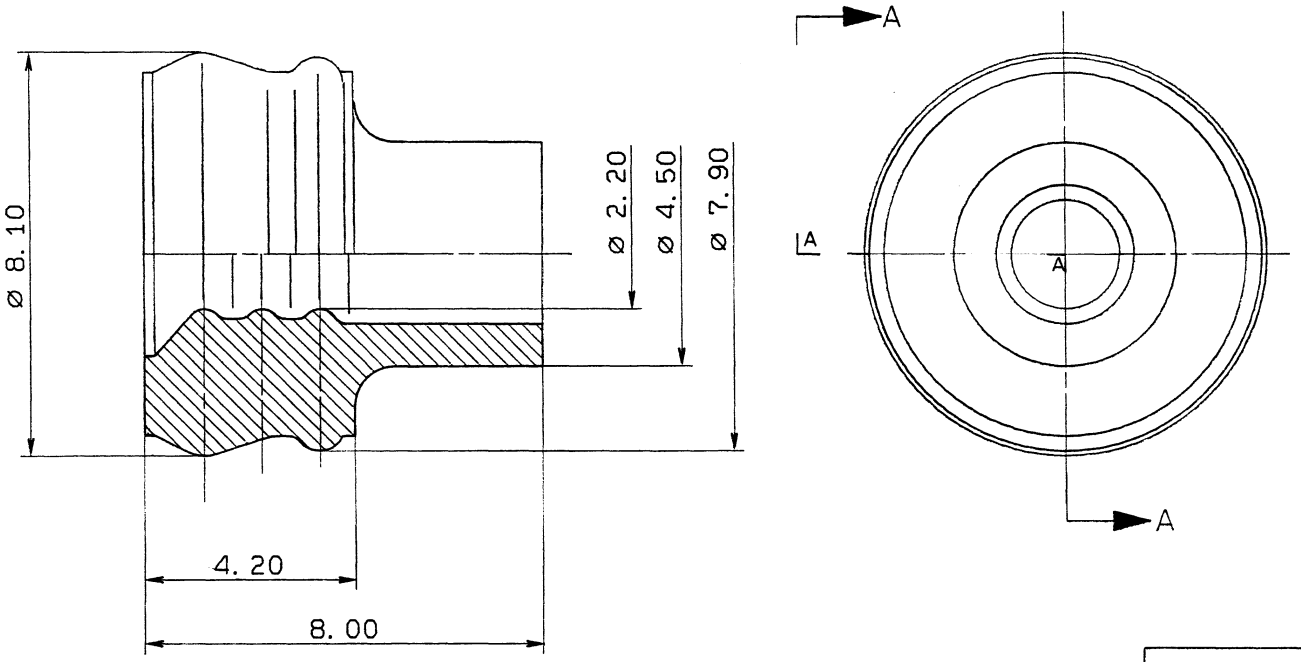

SEC. A-A

注記

1. 色：黒色トスル.
2. 材料：含油NBRゴム
3. 適用電線サイズ： AVS 2～ AVS 3.

NOTES

1. COLOR : BLACK
2. MATL&SPEC : SELF-LUBRICATING, NBR RUBBER.
3. APPLICABLE WIRE SIZE EQUIVALENT TO AVS 2 ~ AVS 3.

ISSUE MARK

LET	DATE	REVISION RECORD	NO.	CHKD
	90.10.01	NEW	C90-M080	T.S

GENERAL TOLERANCE

	10MAX	50MAX	100MAX	250MAX	2500VR	ANGLE	ECCENT
A	±0.15	±0.2	±0.3	±0.5	±0.75	±30'	0.1
B	±0.2	±0.3	±0.55	±0.95	±1.4	±30'	0.1
C	±0.3	±0.5	±0.8	±1.4	±2	±30'	0.15

SPECIFIED
RUBBER PART GENERAL TOLERANCE 3

WEIGHT g

CUSTOMER	
CUSTOMER PART NO.	CUSTOMER DWG NO.
OFFICE	STDLIB NO.
VENDOR	
VENDOR NO.	

DWG TYPE	DWG SOURCE	DWG DATE	UNIT	SCL	ANGLE
R	NEW	90.10.01	mm	10/1	3

APPROVED	CHECKED	CHECKED	DESIGN	DRAWN
河山河	多賀	藤山	YAMAMOTO	T. MAKITA
90.11.1	90.10.26	90.10.25	88.08.20	90.10.01

MATL. SPEC. SEE NOTES

TREAT. & FIN.

NAME 187 RUBBER STOPPER (L SIZE)

PART NO. 7157-3852

DWG NO. 7157-3852:R

TRIAL PART NO.

YAZAKI CORPORATION