RUBBER PART GENERAL TOLERANCE			
PART DIM.	1	2	③
0 TO 3	± 0.2	± 0.3	± 0.4
3 TO 6	± 0.2	± 0.4	± 0.5
6 TO 10	± 0.3	± 0.5	± 0.6

SUB ASS'Y NO.	NO.	PART NO.	MATERIAL
7157-3831-80	①	7157-3830-30	PBT (BLACK)
	②	————	SELF-LUBRICATION SILICONE RUBBER (RED IRON)

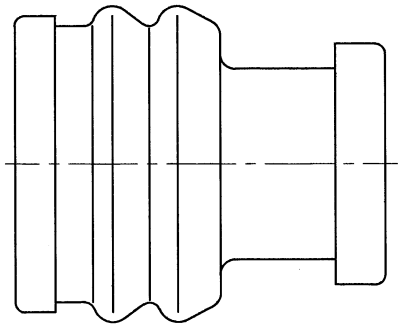

NOTES

1. MATING HOUSING NO.: 7123-1926-30, 7123-1927-80
2. APPLICABLE WIRE SIZE: AVS 1.25, AV 1.25, AVSS 2

注記

1. 嵌合ハウジング品番: 7123-1926-30, 7123-1927-80
2. 適用電線サイズ: AVS 1.25, AV 1.25, AVSS 2

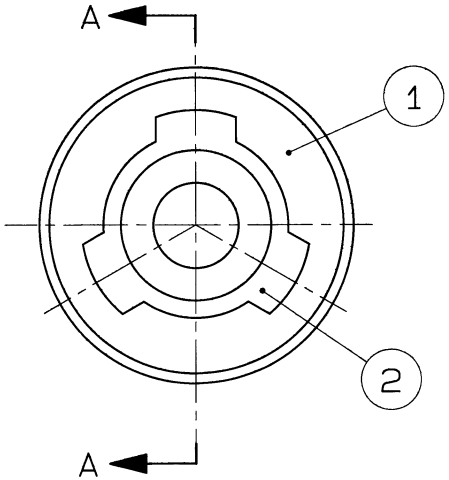

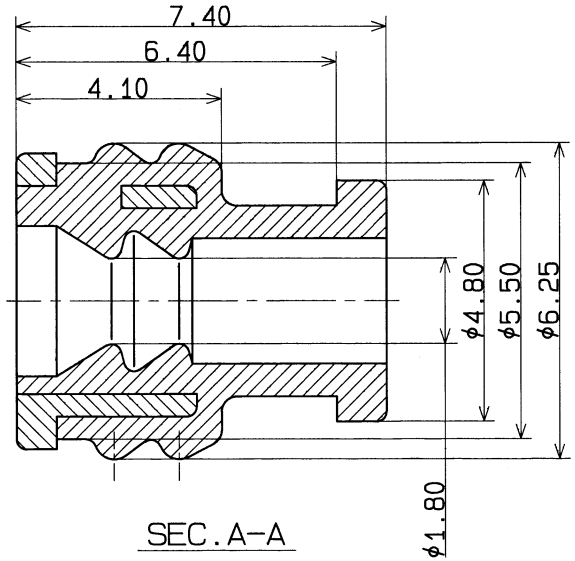

SEC. A-A

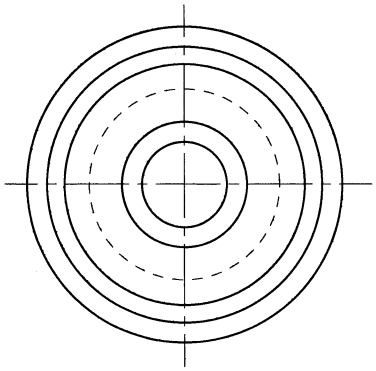

ISSUE MARK

LET	DATE	REVISION RECORD	NO.	CHKD
	95.06.08	NEW	C95-L916	H.F

GENERAL TOLERANCE	10MAX	50MAX	100MAX	250MAX	2500VR	ANGLE	ECCENT
A	±0.15	±0.2	±0.3	±0.5	±0.75	±30'	0.1
B	±0.2	±0.3	±0.55	±0.95	±1.4	±30'	0.1
C	±0.3	±0.5	±0.8	±1.4	±2	±30'	0.15

SPECIFIED

MASS g

CUSTOMER					
CUSTOMER PART NO.		CUSTOMER DWG NO.			
OFFICE		TRIAL PART NO.			
VENDOR					
VENDOR NO.					
DWG TYPE	DWG SOURCE	DWG DATE	UNIT	SCL	ANGLE
R	NEW	95.06.08	mm	10/1	3
APPROVED	CHECKED	CHECKED	DESIGN	DRAWN	
	京瀬 '95-6.8		YASHIMA 87.05.19	TSURUTA 浮沢 95.06.08	

MATL. SPEC.	SEE TABLE
TREAT. & FIN.	
NAME	SEAL RUBBER FOR HEAD LAMP CONNECTOR
PART NO. CH.CODE	7157-3831-80
DWG NO.	7157-3831-80: R
	YAZAKI CORPORATION