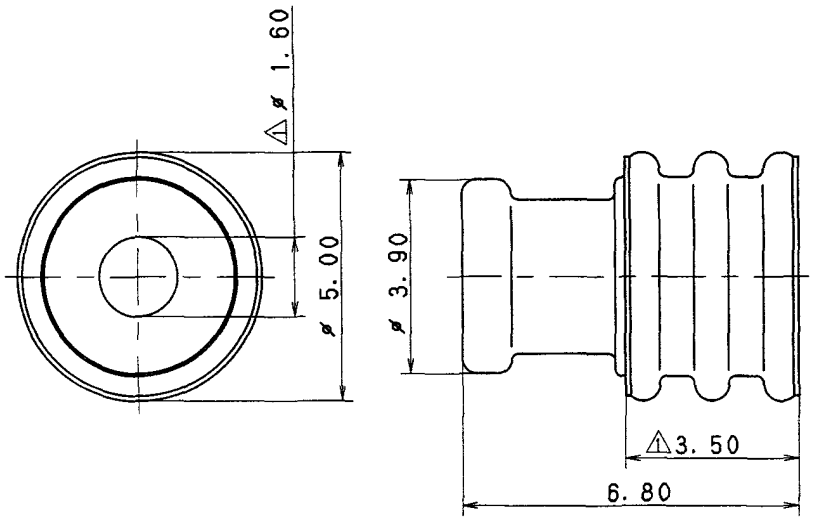

△1 注 記

1. 適用電線サイズ：AVS　0.5 ～ 0.85sq
△3 　　：AVX　0.85sq
　　：CAVS　0.85sq　相当
2. 適用端子品番　：7114-1305, 7116-1305 ETC.
3. 適用ハウジング品番：7222-7780-40,
　　7123-7780-40 ETC.
△3 4. ( ) 内品番は、エアバッグ回路及び、
　特別管理回路に使用する時に、適用すること.

△1 NOTES

1. APPLICABLE WIRE SIZE
　:AVS　0.5 ～ 0.85sq
△3 　:AVX　0.85sq
　:CAVS　0.85sq　(EQUIVALENT)
2. APPLICABLE TERMINAL NO.
　:7114-1305, 7116-1305 ETC.
3. APPLICABLE HOUSING NO.
　:7222-7780-40, 7123-7780-40 ETC.
△3 4. ( ) PART NO. IS USED FOR PARTS ASSOCIATED
　WITH A/B CIRCUITS OR OTHER SPECIFIED CIRCUIT.

RUBBER PART GENERAL TOLERANCE

PART DIM.	1	2	③
0 TO 3	± 0.2	± 0.3	± 0.4
3 TO 6	± 0.2	± 0.4	± 0.5
6 TO 10	± 0.3	± 0.5	± 0.6
10 TO 18	± 0.3	± 0.6	± 0.8
18 TO 30	± 0.4	± 0.8	± 1.0
30 TO 50	± 0.5	± 1.0	± 1.5
50 TO 80	± 0.6	± 1.2	± 2.0
80 TO 120	± 0.7	± 1.4	± 2.5
120 TO 180	± 0.8	± 1.6	± 3.0
180 TO 250	± 1.0	± 2.0	± 4.0
250 TO 315	± 1.2	± 2.5	± 5.0
315 TO 400	± 1.5	± 3.0	± 6.0
400 TO 500	± 1.8	± 3.5	± 7.0
500 OVER	± 0.4 %	± 0.8 %	± 1.5 %

LET	DATE	REVISION RECORD	NO.	CHKD
△3	97.07.11	ADDED NOTE	C97-M447	H.K
△2	94.09.20	CHANGED GRADE OF MATERIAL, A	C94-L630	S.K
△1	93.12.20	RENEW	C93-7170	H.K
	88.08.26	NEW	8MC-1068	.S

GENERAL TOLERANCE

	10MAX	50MAX	100MAX	250MAX	2500VR	ANGLE	ECCENT
A	±0.15	±0.2	±0.3	±0.5	±0.75	±30′	0.1
B	±0.2	±0.3	±0.55	±0.95	±1.4	±30′	0.1
C	±0.3	±0.5	±0.8	±1.4	±2	±30′	0.15

SPECIFIED　　MASS　g

ISSUE MARK

CUSTOMER
CUSTOMER PART NO.　CUSTOMER DWG NO.
OFFICE　TRIAL PART NO.
VENDOR
VENDOR NO.

DWG TYPE	DWG SOURCE	DWG DATE	UNIT	SCL	ANGLE
R	RENEW	87.10.29	mm	10/1	3

APPROVED	CHECKED	CHECKED	DESIGN	DRAWN
神田		渡辺	K. ABE	SERISAWA 浦野
97.07.24		97.7.15	93.12.20	97.07.11

△3 MATL. SPEC. SILICONE RUBBER (LIGHT GREEN)　TREAT. & FIN.

NAME　WIRE SEAL FOR Z-TYPE

PART NO. △2 7157-3791-60 (7B57-3791-60), A
CH. CODE

DWG NO. 7157-3791-60:R　SET DWG NO.

YAZAKI CORPORATION