RUBBER PART GENERAL TOLERANCE			
PART DIM.	1	2	③
0 TO 3	± 0.2	± 0.3	± 0.4
3 TO 6	± 0.2	± 0.4	± 0.5
6 TO 10	± 0.3	± 0.5	± 0.6
10 TO 18	± 0.3	± 0.6	± 0.8
18 TO 30	± 0.4	± 0.8	± 1.0

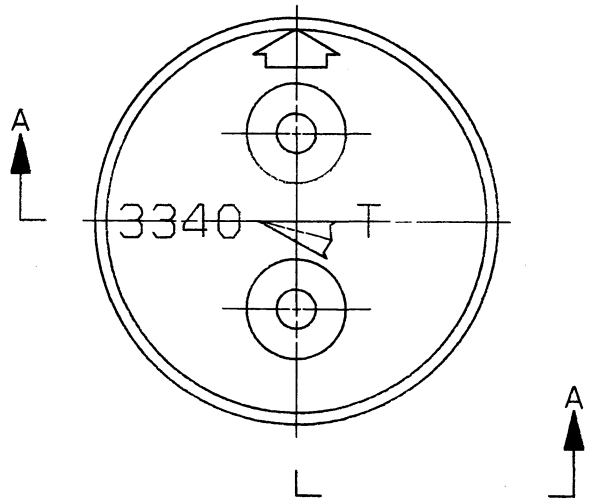

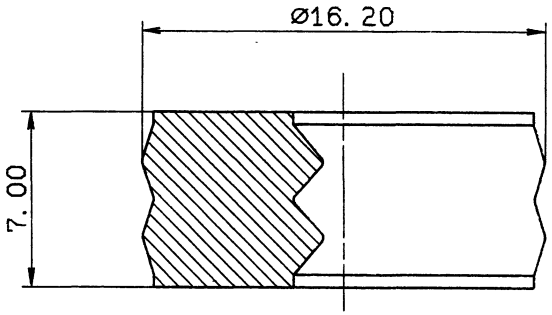

SEC. A-A

ISSUE MARK

LET	DATE	REVISION RECORD	NO.	CHKD
	89.11.06	NEW	C89-7514	K.M

GENERAL TOLERANCE

	10MAX	50MAX	100MAX	250MAX	2500VR	ANGLE	ECCENT
A	±0.15	±0.2	±0.3	±0.5	±0.75	±30'	0.1
B	±0.2	±0.3	±0.55	±0.95	±1.4	±30'	0.1
C	±0.3	±0.5	±0.8	±1.4	±2	±30'	0.15

SPECIFIED

WEIGHT g

CUSTOMER

CUSTOMER PART NO. | CUSTOMER DWG NO.

OFFICE | STDLIB NO.

VENDOR

VENDOR NO.

DWG TYPE	DWG SOURCE	DWG DATE	UNIT	SCL	ANGLE
R	NEW	89.11.06	mm	5/1	3

APPROVED	CHECKED	CHECKED	DESIGN	DRAWN
	加藤	福田 渡部	KATOH	K. MATSUURA
89.11.09	89.11.08	89.11.07	79.08.23	89.11.06

MATL. SILICONE RUBBER
SPEC. COLOR:RED IRON
TREAT. & FIN.

NAME PA 2P SEALED CONNECTOR
RUBBER STOPPER

PART NO. 7157-3340

DWG NO. 7157-3340:R

TRIAL PART NO.

YAZAKI CORPORATION