RUBBER PART GENERAL TOLERANCE			
PART DIM.	1	2	3
0 TO 3	± 0.2	± 0.3	± 0.4
3 TO 6	± 0.2	± 0.4	± 0.5
6 TO 10	± 0.3	± 0.5	± 0.6
10 TO 18	± 0.3	± 0.6	± 0.8
18 TO 30	± 0.4	± 0.8	± 1.0
30 TO 50	± 0.5	± 1.0	± 1.5
50 TO 80	± 0.6	± 1.2	± 2.0
80 TO 120	± 0.7	± 1.4	± 2.5
120 TO 180	± 0.8	± 1.6	± 3.0
180 TO 250	± 1.0	± 2.0	± 4.0
250 TO 315	± 1.2	± 2.5	± 5.0
315 TO 400	± 1.5	± 3.0	± 6.0
400 TO 500	± 1.8	± 3.5	± 7.0
500 OVER	± 0.4 %	± 0.8 %	± 1.5 %

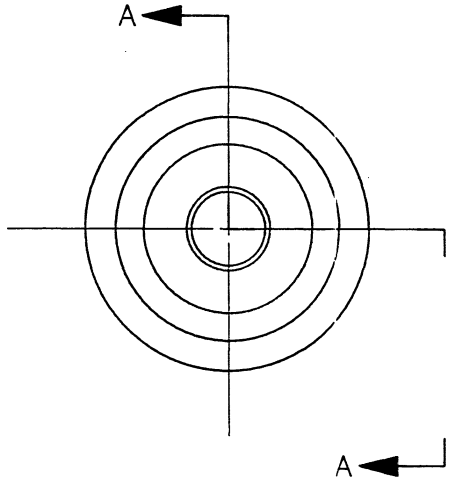

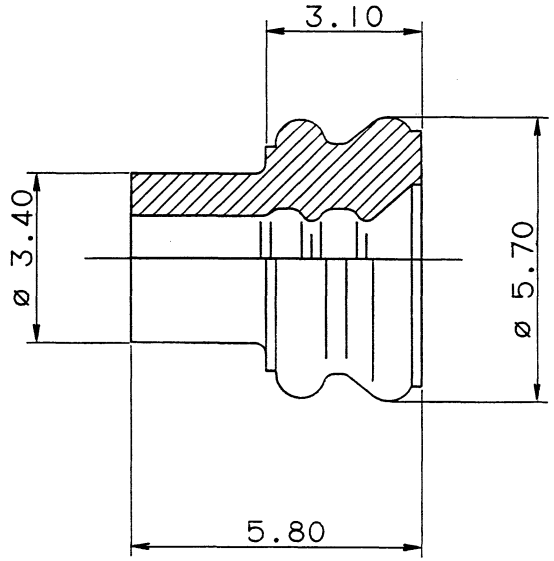

SEC. A-A

NOTES

1) COLOR; RED-IRON.
2) MATL&SPEC; SELF-LUBRICATING, SILICON RUBBER.
3) APPLICABLE WIRE SIZE EQUIVALENT TO AVS 0.5～AEX 1.25.

注記

1) 色； ベンガラ.
2) 材料； 含油シリコンゴム.
3) 適応電線サイズ AVS 0.5 ～ AEX 1.25 相当トスル.

ISSUE MARK

LET	DATE	REVISION RECORD	NO.	CHKD
	85.04.15	NEW	C85-5364	M.T

GENERAL TOLERANCE

	10MAX	50MAX	100MAX	250MAX	2500VR	ANGLE	ECCENT
A	±0.15	±0.2	±0.3	±0.5	±0.75	±30′	0.1
B	±0.2	±0.3	±0.55	±0.95	±1.4	±30′	0.1
C	±0.3	±0.5	±0.8	±1.4	±2	±30′	0.15

SPECIFIED
RUBBER PART GENERAL TOLERANCE 2

WEIGHT
0.1 g

CUSTOMER
CUSTOMER PART NO.
CUSTOMER DWG NO.
OFFICE NAGOYA
STDLIB NO.
VENDOR
VENDOR NO.

DWG TYPE	DWG SOURCE	DWG DATE	UNIT	SCL	ANGLE
R	NEW	85.04.15	mm	10/1	3

APPROVED	CHECKED	CHECKED	DESIGN	DRAWN
青木	三	加藤 福田	TSUJI	辻
85.04.23	85.04.22	85.04.18	84.06.14	85.04.16

MATL. SPEC. SEE NOTES
TREAT. & FIN.
NAME 090, RUBBER STOPPER
(USE FOR 5.30 DIA CAVITY)
PART NO. 7157-3646
DWG NO. 7157-3646:R
TRIAL PART NO. 084157-5596

YAZAKI CORPORATION