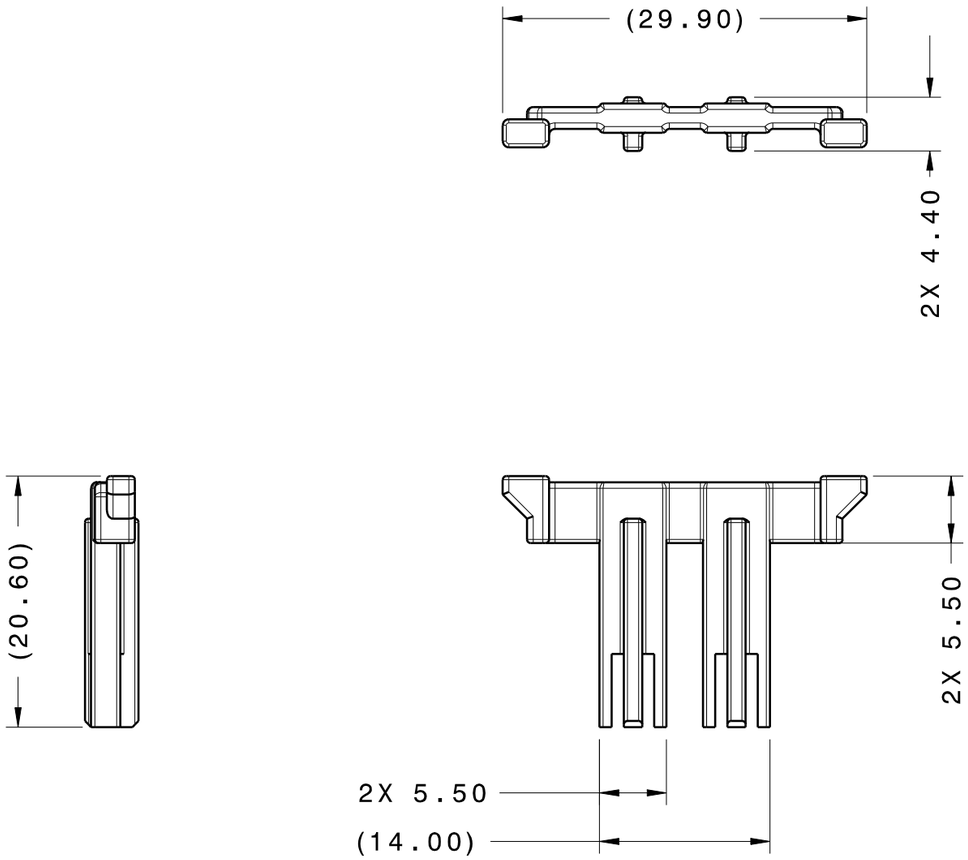


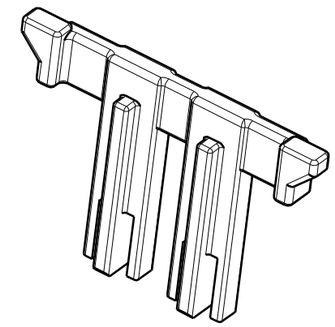

ISOMETRIC VIEW

NOTES:

1. MATERIAL: PBT (NATURAL)
2. MUST COMPLY WITH YPES-31-038 REQUIREMENTS.
3. MATING PARTS (FOR REFERENCE ONLY): 7154-7865 - IEC BASE

ISSUE MARK

| REV | DATE | REVISION RECORD | NO. | CHKD |
|---|---|---|---|---|
| - | 02/17/16 | NEW | C16-A178 | F.A |

GENERAL TOLERANCE

| | 10MAX | 50MAX | 100MAX | 250MAX | 2500VR | ANGLE | ECCENT |
|---|---|---|---|---|---|---|---|
| A | ±0.15 | ±0.2 | ±0.3 | ±0.5 | ±0.75 | ±30' | 0.1 |
| B | ±0.2 | ±0.3 | ±0.55 | ±0.95 | ±1.4 | ±30' | 0.1 |
| Ⓒ | ±0.3 | ±0.5 | ±0.8 | ±1.4 | ±2 | ±30' | 0.15 |

SPECIFIED

MASS (1.07g)

CUSTOMER ---

CUSTOMER PART NO. ---

CUSTOMER DWG NO. ---

OFFICE YNA

TRIAL PART NO. ---

VENDOR ---

VENDOR NO. ---

| DWG TYPE | DWG SOURCE | DWG DATE | UNIT | SCL | ANGLE |
|---|---|---|---|---|---|
| R | NEW | 02/17/16 | mm | 2:1 | 3 |

| APPROVED | CHECKED | CHECKED | ENGINEER | DRAWN |
|---|---|---|---|---|
| jenvun.ng@us.yazaki.com 2016.12.21 16:56:29 -05'00' | | Michael A Manor Digitally signed by Mike Manor DN: cn=Mike Manor, o=US, ou=BU: Power Distribution, ou=Yazaki North America, INC. email=mike.manor@us.yazaki.com Date: 2016.12.19 14:13:57 -05'00' | M.BAN 08/01/14 | F. AL-HOURANI 02/17/16 |

MATL. SPEC. SEE NOTES

TREAT. & FIN. N/A

NAME 3P MCASE REAR HOLDER

PART NO. 7154-7870

SET DWG NO. -

DWG NO. 7154-7870:R

SHEET: 1 OF: 1

YAZAKI NORTH AMERICA

CATIA V5 METRIC A3

ITEM ID: X31370-A836