NO.	YAZAKI PART NO.	MATERIAL
①	7147-3642-30	P. P(BLACK)
②	7147-3642	P. P(NATURAL)

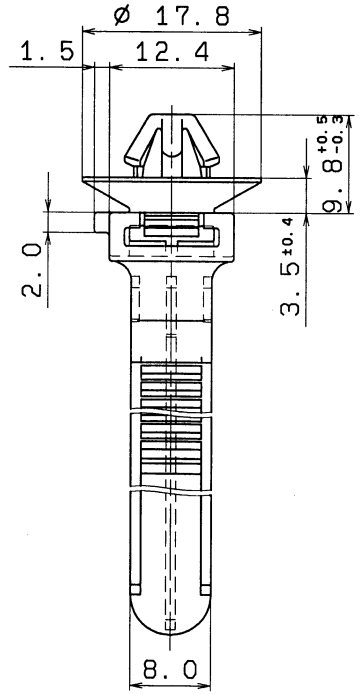

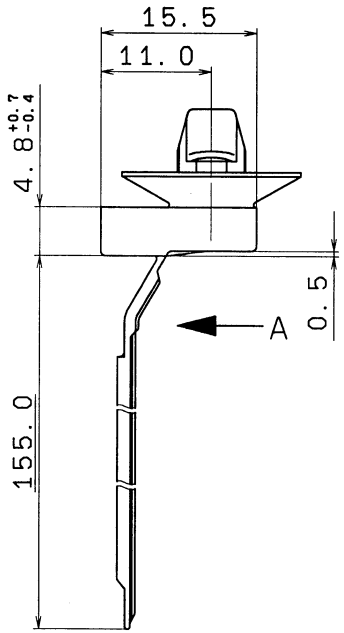

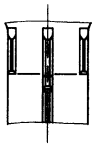

VIEW A

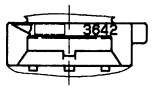

VIEW B

NOTES

1) SPECS OF CLIP
   - A) INSERTION FORCE : MAX. 78.4N
   - B) SEPARATION FORCE : MIN. 147.0N
   - C) PANEL HOLE : ø7.0 ±0.2
   - D) PANEL THICKNESS : t=0.6~2.6
2) APPLICABLE W/H DIA : ø1.6(CAVS 0.5sq 1pc.)~ø35

注 記

1) クリップ仕様
   - A)パネルへの挿入力 : 78.4N以下
   - B)パネルからの離脱力 : 147.0N以上
   - C)パネル穴 : ø7.0 ±0.2
   - D)板厚 : t=0.6~2.6
2) 適用ハーネス径 : ø1.6(CAVS 0.5sq1本)~ø35

ISSUE MARK

LET	DATE	REVISION RECORD	NO.	CHKD
3	00.01.18	CHANGED DIMENSION	C00-H006	E.O
2	98.09.18	ADDED PART NO.	C98-H078	W.O
1	97.03.19	CHANGED FORM	C97-H026	E.O
	95.12.18	RELEASED & RENEW	C95-H185	W.O

GENERAL TOLERANCE

	10MAX	50MAX	100MAX	250MAX	2500VR	ANGLE	ECCENT
A	±0.15	±0.2	±0.3	±0.5	±0.75	±30'	0.1
B	±0.2	±0.3	±0.55	±0.95	±1.4	±30'	0.1
Ⓒ	±0.3	±0.5	±0.8	±1.4	±2	±30'	0.15

SPECIFIED

MASS 1.8 g

CUSTOMER				
CUSTOMER PART NO.	CUSTOMER DWG NO.			
OFFICE	TRIAL PART NO.			
VENDOR	7F9447-H064			
VENDOR NO.				

DWG TYPE	DWG SOURCE	DWG DATE	UNIT	SCL	ANGLE
R	NEW	95.12.18	mm	2/1	3

APPROVED	CHECKED	CHECKED	DESIGN	DRAWN
森	杉本	亀山片山	KATAYAMA	岡田
'00.01.21	'00.01.21	'00.01.20	95.07.27	'00.01.18

MATL. SPEC. SEE TABLE

TREAT. & FIN.

NAME CLIP (BAND CLIP ø7.0 t=0.6~2.6)

PART NO. / CH. CODE 7147-3642-30 ETC.

DWG NO. 7147-3642-30:R

SET DRW NO.

YAZAKI CORPORATION