STDLIB-V5R25

RUBBER GENERAL TOLERANCE			
	A	B	Ⓒ
0 TO 4	± 0.10	± 0.25	± 0.50
~ TO 6.3	± 0.15	± 0.25	± 0.50
~ TO 10	± 0.20	± 0.30	± 0.70
~ TO 16	± 0.20	± 0.40	± 0.80
~ TO 25	± 0.25	± 0.50	± 1.00
~ TO 40	± 0.35	± 0.60	± 1.30
~ TO 63	± 0.40	± 0.80	± 1.60
~ TO 100	± 0.50	± 1.00	± 2.00
~ TO 160	± 0.70	± 1.30	± 2.50
160 OVER	± 0.5%	± 0.8%	± 1.5%

NOTES
1) MATING PART NO. : 7173-3670, 7371-5365-0W
2) EXPANSION DIMENSION: □50 MAX.

注記
1) 嵌合相手品番 : 7173-3670, 7371-5365-0W
2) 拡張寸法 : □50以下

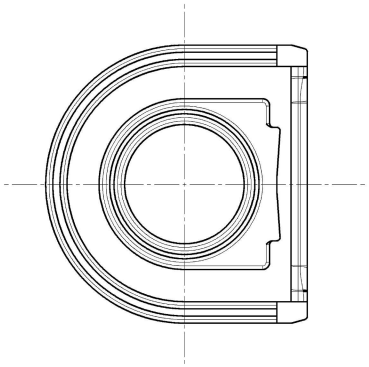

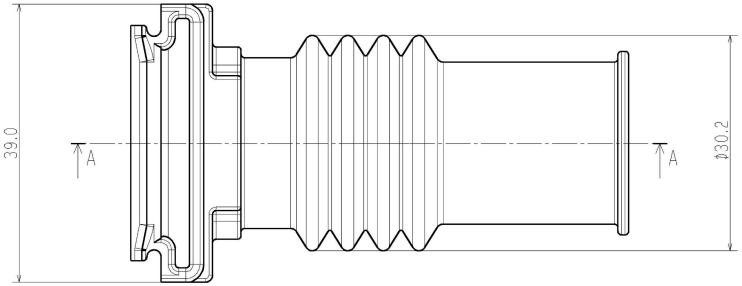

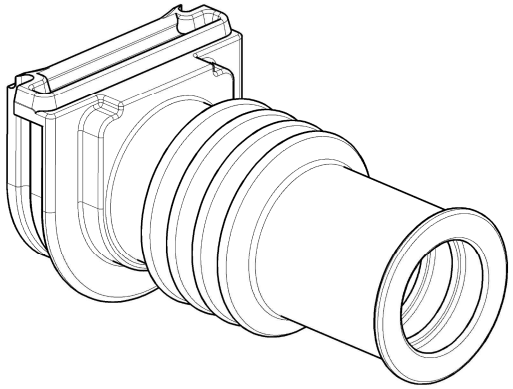

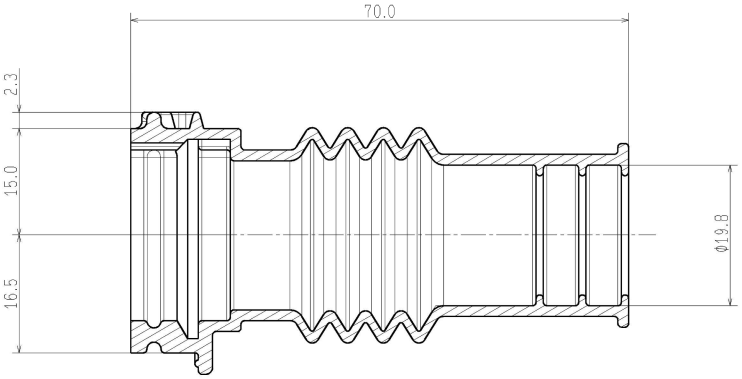

A-A

ISSUE MARK

2019/01/14	NEW	C19-3069	N.D
LET DATE	REVISION RECORD	NO.	CHKD

GENERAL TOLERANCE							
	10MAX	50MAX	100MAX	250MAX	2500VR	ANGLE	ECCENT
A	±0.15	±0.20	±0.30	±0.50	±0.75	±0.5°	0.10
B	±0.20	±0.30	±0.55	±0.95	±1.40	±1.0°	0.10
C	±0.30	±0.50	±0.80	±1.40	±2.00	±1.5°	0.15

SPECIFIED
SEE RUBBER GENERAL TOLERANCE CLASS = C

MASS 14.3 g

CUSTOMER					
CUSTOMER PART NO.					
CUSTOMER DWG NO.					
OFFICE	TRIAL PART NO. or PRODUCT NO.				
VENDOR					
VENDOR NO.					
DWG TYPE	DWG SOURCE	DWG DATE	UNIT	SCL	ANGLE
R	NEW	2019/01/14	mm	2:1	3
APPROVED	CHECKED	CHECKED	DESIGN	DRAWN	
望月	義村	豊田	OONO	NORWAY	
			2016/08/11	2019/01/14	

MATL. SPEC.	EPDM(BLACK)
TREAT. & FIN.	
NAME	W TO W BOX GROMMET B
PART NO.	7135-4287-30
CH. CODE	
DWG NO.	7135-4287-30:R
SET DWG NO.	

YAZAKI Corporation

A2

YYYYMMDD-99999