△1 YAZAKI PART NO. AND CH. CODE	W1	R1	W2	R2	APPLICABLE WIRE SIZE (mm^2)
△2 7126-8865-02, A	3.10	0.70	5.30	1.60	0.7175～1.964 (CHFS0.75sq～HFSS2sq)
△2 7126-8863-02, B	5.30	1.25	7.80	2.00	2.976～5.228 (HF3sq～AVS5sq)

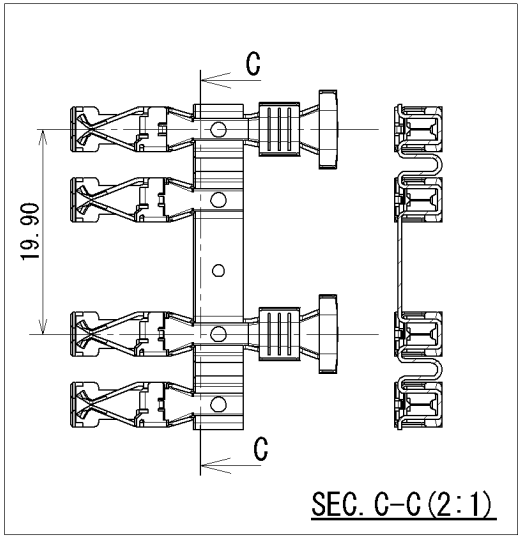

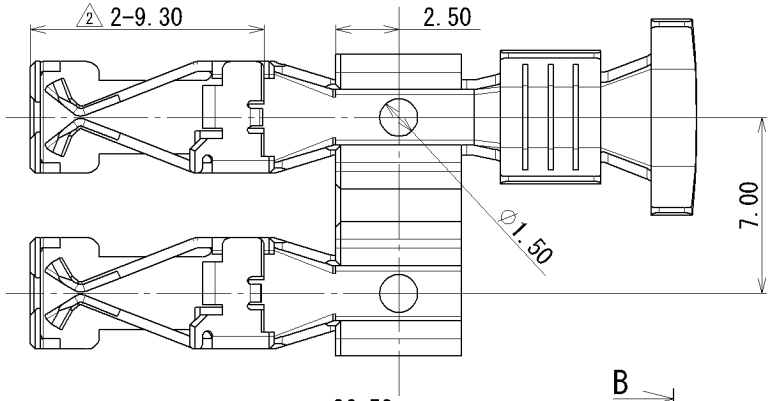

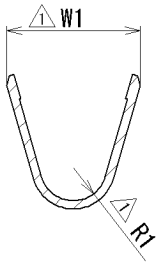

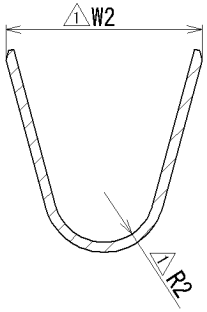

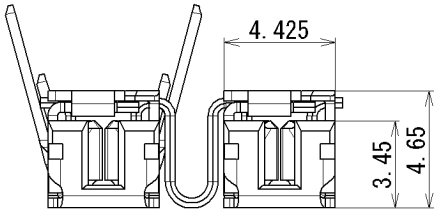

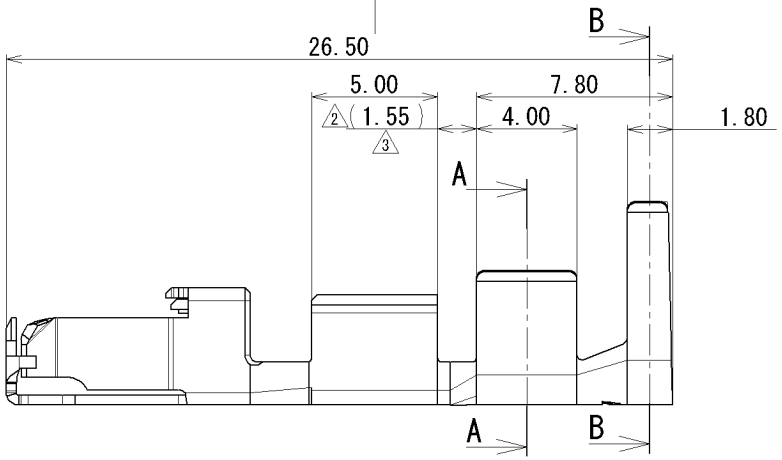

ISSUE MARK

LET	DATE	REVISION RECORD	NO.	CHKD
△3	09/01/14	CHANGED DIMENSION, ETC.	C09-Z033	T.O
△2	07/04/20	CHANGED DIMENSION, ETC. B A	C07-Z314	T.M
△1	04/12/21	ADDED PART NO., ETC.	C04-ZF73	T.H
	04/02/23	NEW, A	C04-X164	Y.S

GENERAL TOLERANCE

	10MAX	50MAX	100MAX	250MAX	2500VR	ANGLE	ECCENT
A	±0.15	±0.2	±0.3	±0.5	±0.75	±30'	0.1
B	±0.2	±0.3	±0.55	±0.95	±1.4	±30'	0.1
Ⓒ	±0.3	±0.5	±0.8	±1.4	±2	±30'	0.15

SPECIFIED

MASS g

CUSTOMER

CUSTOMER PART NO. | CUSTOMER DWG NO.

OFFICE | TRIAL PART NO.

VENDOR

VENDOR NO.

DWG TYPE	DWG SOURCE	DWG DATE	UNIT	SCL	ANGLE
R	NEW	04/02/23	mm	5:1	3

APPROVED	CHECKED	CHECKED	DESIGN	DRAWN
M. YAMANASHI	T. MIWA	T. OSADA	T. HARADA	C. AGCAOILI
09/01/14	09/01/14	09/01/14	02/09/03	09/01/14

MATL. SPEC. COPPER ALLOY (t=0.4)

TREAT. & FIN. TIN PLATING

NAME LOW HEIGHT MINI FUSE TERMINAL 2WAY-L

PART NO. CH. CODE △1 7126-8863-02 ETC.

DWG NO. 7126-8863-02:R

SET DWG NO.

YAZAKI CORPORATION